Integrating the Healthcare Enterprise

IHE Patient Care Coordination Technical Framework Supplement

360 Exchange Closed Loop Referral (360X)

Rev. 1.2 – Trial Implementation

Date: April 14, 2021

Author: PCC Technical Committee

Email: pcc@ihe.net

Please verify you have the most recent version of this document. See here for Trial Implementation and Final Text versions and here for Public Comment versions.

Copyright © 2021: IHE International, Inc.

Foreword

This is a supplement to the IHE Patient Care Coordination Technical Framework V11.0. Each supplement undergoes a process of public comment and trial implementation before being incorporated into the volumes of the Technical Frameworks.

This supplement is published on April 14, 2021 for trial implementation and may be available for testing at subsequent IHE Connectathons. The supplement may be amended based on the results of testing. Following successful testing it will be incorporated into the Patient Care Coordination Technical Framework. Comments are invited and can be submitted at http://www.ihe.net/PCC_Public_Comments.

This supplement describes changes to the existing technical framework documents.

"Boxed" instructions like the sample below indicate to the Volume Editor how to integrate the relevant section(s) into the relevant Technical Framework volume.

Amend Section X.X by the following:

Where the amendment adds text, make the added text **bold underline**. Where the amendment removes text, make the removed text **bold strikethrough**. When entire new sections are added, introduce with editor's instructions to "add new text" or similar, which for readability are not bolded or underlined.

General information about IHE can be found at http://ihe.net.

Information about the IHE Patient Care Coordination domain can be found at http://ihe.net/IHE_Domains.

Information about the organization of IHE Technical Frameworks and Supplements and the process used to create them can be found at http://ihe.net/IHE_Process and http://ihe.net/Profiles.

The current version of the IHE Patient Care Coordination Technical Framework can be found at http://ihe.net/Technical_Frameworks.

 Copyright © 2021: IHE International, Inc.

CONTENTS

Introduction to this Supplement 8
Open Issues and Questions 8
Closed Issues 10
IHE Technical Frameworks General Introduction 12
9 Copyright Licenses 12
9.1 Copyright of Base Standards 12
9.1.1 DICOM (Digital Imaging and Communications in Medicine) 12
9.1.2 HL7 (Health Level Seven) 12
9.1.3 LOINC (Logical Observation Identifiers Names and Codes) 12
9.1.4 SNOMED CT (Systematized Nomenclature of Medicine -- Clinical Terms) 13
10 Trademark 13
IHE Technical Frameworks General Introduction Appendices 14
Appendix A – Actor Summary Definitions 14
Appendix B – Transaction Summary Definitions 14
Appendix D – Glossary 15
Volume 1 – Profiles 17
Copyright Licenses 17
Domain-specific additions 17
X 360 Exchange Closed Loop Referral (360X) Profile 17
X.1 360X Actors, Transactions, and Content Modules 17
X.1.1 Actors and Transactions 18
X.1.2 Content Modules 20
X.1.3 Actor Descriptions and Actor Profile Requirements 21
X.1.3.1 Referral Initiator 21
X.1.3.2 Referral Recipient 22
X.2 360X Options 23
X.2.1 360X Actor Options 23
X.2.1.1 360X Scheduling Option 23
X.2.2 360X Transport Options 24
X.2.2.1 XDR Option 24
X.2.2.2 MHD Option 24
X.2.3 360X Content Options 24
X.2.3.1 XDS-MS Referral Summary and XPHR Option 24
X.2.3.2 C-CDA Option 24
X.3 360X Actor Groupings 25
X.3.1 Required Actor Groupings – XDM 25
X.3.2 Optional Actor Groupings – XDR Option 25
X.3.3 Optional Actor Groupings – MHD Option 26
X.4 360X Overview 27
X.4.1 Concepts 27
X.4.2 Use Cases 28

 Copyright © 2021: IHE International, Inc.

X.4.2.1 Use Case #1: PCP to Specialist 29
X.4.2.1.1 PCP to Specialist Use Case Description 29
X.4.2.1.2 PCP to Specialist Process Flow 30
X.4.2.2 Use Case #2: Public Health to Specialist 30
X.4.2.2.1 Public Health to Specialist Use Case Description 30
X.4.2.2.2 Public Health to Specialist Process Flow 31
X.5 360X Security Considerations 32
X.6 360X Cross Profile Considerations 32
X.6.1 ROL – Referral/Order Linking 32
X.6.2 XBeR-WD – Cross Enterprise Basic eReferral Workflow Definition 33
Appendices 34
Volume 2 – Transactions 35
3.55 Referral Request [PCC-55] 35
3.55.1 Scope 35
3.55.2 Actor Roles 35
3.55.3 Referenced Standards 35
3.55.4 Messages 36
3.55.4.1 Referral Request Package 36
3.55.4.1.1 Trigger Events 36
3.55.4.1.2 Message Semantics 36
3.55.4.1.2.1 Message Content – Metadata 37
3.55.4.1.2.2 Message Content – Referral Order 43
3.55.4.1.2.3 Message Content – Clinical Information 44
3.55.4.1.3 Expected Actions 46
3.55.4.2 Referral Accept 47
3.55.4.2.1 Trigger Events 47
3.55.4.2.2 Message Semantics 47
3.55.4.2.2.1 Message Content – Metadata 47
3.55.4.2.2.2 Message Content – Referral Status Update 51
3.55.4.2.3 Expected Actions 51
3.55.4.3 Referral Decline 52
3.55.4.3.1 Trigger Events 52
3.55.4.3.2 Message Semantics 52
3.55.4.3.2.1 Message Content – Metadata 52
3.55.4.3.2.2 Message Content – Referral Status Update 56
3.55.4.3.3 Expected Actions 56
3.55.5 Security Considerations 57
3.55.5.1 Security Audit Considerations 57
3.55.5.2 Referral Recipient Specific Security Considerations 57
3.56 Referral Decline [PCC-56] 58
3.56.1 Scope 58
3.56.2 Actor Roles 58
3.56.3 Referenced Standards 58
3.56.4 Messages 58

 Copyright © 2021: IHE International, Inc.

3.56.4.1 Referral Decline ... 59
3.56.4.1.1 Trigger Events ... 59
3.56.4.1.2 Message Semantics ... 59
3.56.4.1.3 Expected Actions ... 59
3.56.5 Security Considerations ... 60
3.56.5.1 Security Audit Considerations ... 60
3.57 Referral Outcome [PCC-57] ... 61
3.57.1 Scope ... 61
3.57.2 Actor Roles ... 61
3.57.3 Referenced Standards ... 61
3.57.4 Messages ... 62
3.57.4.1 Referral Outcome Package ... 62
3.57.4.1.1 Trigger Events ... 62
3.57.4.1.2 Message Semantics ... 62
3.57.4.1.2.1 Message Content – Metadata ... 63
3.57.4.1.2.2 Message Content – Referral Status Update ... 69
3.57.4.1.2.3 Message Content – Clinical Information ... 69
3.57.4.1.3 Expected Actions ... 71
3.57.5 Security Considerations ... 71
3.57.5.1 Security Audit Considerations ... 71
3.58 Referral Cancellation [PCC-58] ... 72
3.58.1 Scope ... 72
3.58.2 Actor Roles ... 72
3.58.3 Referenced Standards ... 72
3.58.4 Messages ... 72
3.58.4.1 Cancel Request Message ... 73
3.58.4.1.1 Trigger Events ... 73
3.58.4.1.2 Message Semantics ... 73
3.58.4.1.2.1 Message Content – Metadata ... 74
3.58.4.1.2.2 Message Content – Referral Status Update ... 78
3.58.4.1.3 Expected Actions ... 78
3.58.4.2 Cancel Confirmation ... 79
3.58.4.2.1 Trigger Events ... 79
3.58.4.2.2 Message Semantics ... 79
3.58.4.2.2.1 Message Content – Metadata ... 79
3.58.4.2.2.2 Message Content – Referral Status Update ... 83
3.58.4.2.3 Expected Actions ... 83
3.58.5 Security Considerations ... 84
3.58.5.1 Security Audit Considerations ... 84
3.59 Interim Consultation Note [PCC-59] ... 85
3.59.1 Scope ... 85
3.59.2 Actor Roles ... 85
3.59.3 Referenced Standards ... 85
3.59.4 Messages ... 86

 Copyright © 2021: IHE International, Inc.

3.59.4.1 Interim Consultation Note Package ... 86
3.59.4.1.1 Trigger Events ... 86
3.59.4.1.2 Message Semantics ... 87
3.59.4.1.2.1 Message Content – Metadata ... 87
3.59.4.1.2.2 Message Content – Referral Status Update ... 93
3.59.4.1.2.3 Message Content – Clinical Information ... 94
3.59.4.1.3 Expected Actions ... 94
3.59.5 Security Considerations ... 94
3.59.5.1 Security Audit Considerations ... 94
3.60 Appointment Notification [PCC-60] ... 95
3.60.1 Scope ... 95
3.60.2 Actor Roles ... 95
3.60.3 Referenced Standards ... 95
3.60.4 Messages ... 96
3.60.4.1 New Appointment Package ... 96
3.60.4.1.1 Trigger Events ... 96
3.60.4.1.2 Message Semantics ... 96
3.60.4.1.2.1 Message Content - Metadata ... 97
3.60.4.1.2.2 Message Content – Appointment Notification ... 100
3.60.4.1.3 Expected Actions ... 101
3.60.4.2 Reschedule Appointment Package ... 101
3.60.4.2.1 Trigger Events ... 101
3.60.4.2.2 Message Semantics ... 101
3.60.4.2.2.1 Message Content - Metadata ... 102
3.60.4.2.2.2 Message Content – Appointment Reschedule ... 102
3.60.4.2.3 Expected Actions ... 102
3.60.4.3 Cancel Appointment Package ... 102
3.60.4.3.1 Trigger Events ... 102
3.60.4.3.2 Message Semantics ... 103
3.60.4.3.2.1 Message Content - Metadata ... 103
3.60.4.3.2.2 Message Content – Cancel Appointment ... 103
3.60.4.3.3 Expected Actions ... 103
3.60.5 Security Considerations ... 103
3.60.5.1 Security Audit Considerations ... 104
3.61 No-show Notification [PCC-61] ... 105
3.61.1 Scope ... 105
3.61.2 Actor Roles ... 105
3.61.3 Referenced Standards ... 105
3.61.4 Messages ... 106
3.61.4.1 No-show Notification Package ... 106
3.61.4.1.1 Trigger Events ... 106
3.61.4.1.2 Message Semantics ... 106
3.61.4.1.2.1 Message Content - Metadata ... 107
3.61.4.1.2.2 Message Content – No-show Notification ... 110

 Copyright © 2021: IHE International, Inc.

3.61.4.1.3 Expected Actions 111
3.61.5 Security Considerations 111
3.61.5.1 Security Audit Considerations 111
Appendices 112
Volume 2 Namespace Additions 112
Volume 3 – Content Modules 113
Volume 4 – National Extensions 114
4 National Extensions 115
4.I National Extensions for IHE USA 115
4.I.1 Comment Submission 115
4.I.2 Closed Loop Referral (360X) 115
4.I.2.1 360X Transport Requirements – Use of Direct 115
4.I.2.2 360X HL7 V2.x Requirements - MSH and PID Segments 115
4.I.2.3 360X Clinical Content Requirements – Consolidated CDA 116

 Copyright © 2021: IHE International, Inc.

Introduction to this Supplement

This supplement represents a new profile, with an accompanying US national extension, to the PCC Technical Framework. The national extension is based upon the requirements specified by various programs of the Office of the National Coordinator for Health IT (ONC) and the Centers for Medicare and Medicaid Services (CMS). These requirements, in turn, are based on several existing IHE profiles.

The supplement combines both transactions and content to provide a complete implementable specification to satisfy the general use case for closed loop referral.

Open Issues and Questions

I3. For the Referral Request metadata, we have to indicate the patientId metadata attribute as potentially empty. This is OK for validation, if we indicate the use of Limited Metadata. On the other hand, there are extensive requirements for other metadata that go beyond limited (or regular) metadata. Should we include the Limited Metadata attribute in the metadata?

I4. Add suggested use of the C-CDA 2.1 Care Plan document as part of the referral workflow: Recommendation made to add C-CDA 2.1 Patient Referral Act template (template ID root 2.16.840.1.113883.10.20.22.4.140) as an entryRelationship in Planned Intervention Act (template ID root 2.16.840.1.113883.10.20.22.4.146 and template ID extension 2015-08-01) in the Intervention section of the Care Plan document. The purpose of doing this is to support referral orders such as physical therapy or ostomy and wound care nursing orders to assess and treat the patient. Inclusion of the Patient Referral Act template in this way will enable the support of entry references to related goals and other intervention elements as well as relationship to health status evaluation and outcomes elements.

I5. Is there a need to specify the receiving organization in a referral request beyond the Direct address already required, and if so how? The challenge is that when a request for referral is sent, the receiving party may have one of various organization structures in place to manage the referral depending in large part on the organizational size. It may range from an individual practice with one person managing all referral requests to a large enterprise with either centralized or de-centralized scheduling centers.

When sending a message, the sender needs to send the message to the right inbox (without having to deal with complex rules on where to send what), while the receiver needs to have enough information to get it to the right scheduling center/person (without unnecessary human intervention).

360X has a potential choice of fields to use to provide the relevant information on the message balancing the needs of the sender and receiver:

Direct Address – The sender must know which of the potentially multiple Direct Addresses to use to send the message.

XD* Intended Recipient – Enables indication of the organization, and/or the person, who the intended recipient is.

 Copyright © 2021: IHE International, Inc.

MSH-6 Receiving Facility – Enables indication of the facility that the message is supposed to be sent to. The challenge is that facility has an ambiguous meaning, including location, organization, and even application (although the latter is not necessarily the intent).

MSH-23 Receiving Responsible Organization – This was introduced to address the challenge with MSH-6 and disambiguate that.

PRT Segment – A PRT segment with ORC/OBR can be used to with a participation of RT – Referred to Provider that can reflect a person or organization to whom the referral is made.

Note that generally, regardless of approach, the receiver needs to provide the sender with the appropriate "designation", whether one or more Direct Addresses, organization names, or persons to help ensure the referral request to the right party, so the question is mostly about which field to use.

The following are possible alternatives and their pros/cons the team is considering. You may have additional pros/cons and value some more strongly than others that go into your feedback on which approach is most suitable:

1. Direct Address
    - Pros:
        - Already need to have it and looks like an e-mail address that many are used to.
    - Cons
        - The variant where Direct/XDM is not part of the message exchange, i.e., straight V2, would then not have anything to rely on.
2. XD Intended Recipient
    - Pros:
        - Can be more specific than the Direct Address using an organization or person.
    - Cons:
        - The variant where XDM or XDR is not part of the message exchange, i.e., straight V2, would then not have anything to rely on.
3. MSH-6 Receiving Facility
    - Pros:
        - Known field in MSH for many years
        - Data is available when XD* wrapper is not present.
        - Currently in use by LRI/LOI specifications

 Copyright © 2021: IHE International, Inc.

- Cons:
  - Ambiguous in older versions, while focusing on location in newer versions and location is not the right concept to ask for a referral, while an organization or person is.
  - Part of a structural element of the message, not the actual request itself, which is ORC/OBR.
  - Does not include an opportunity to designate a person.

4. MSH-23 Receiving Responsible Organization
   - Pros:
     - Clear focus on an organization
     - Data is available when Direct/XD wrapper is not present.
   - Cons:
     - Relatively new in MSH requiring pre-adoption.
     - Part of a structural element of the message, not the actual request itself, which is ORC/OBR.
     - Does not include an opportunity to designate a person.
5. PRT Segment under ORC
   - Pros:
     - Allows for a person and/or organization
     - Together with the referral request
     - Data is available when Direct/XD wrapper is not present.
   - Cons:
     - Relatively new in HL7 requiring pre-adoption.

Please provide feedback as to which alternative you propose and which alternative you prefer to avoid.

Closed Issues

I1. It is not clear the best way to format this supplement. The initial work will create the usual volume 1, and volume 2 structure, and will indicate US specific requirements (Direct Protocol and C-CDA content) in a Volume 4 (National Extension) presentation.
Resolution: This supplement defines an integration profile with content option, and the US National Extension further constrains the requirements.

 Copyright © 2021: IHE International, Inc.

I2. The state transition diagram contains the abstract state of Specialist Visit Completed, which provides the capability for sending preliminary consultation notes, or to allow for multiple visits with the Referral Recipient. There is a question whether this wording is appropriate, and if there are exceptions that may make the state name confusing.
Resolution: No comments were made on this issue; it seems that the wording is clear.

 Copyright © 2021: IHE International, Inc.

IHE Technical Frameworks General Introduction

The IHE Technical Framework General Introduction is shared by all of the IHE domain technical frameworks. Each technical framework volume contains links to this document where appropriate.

9 Copyright Licenses

IHE International hereby grants to each Member Organization, and to any other user of these documents, an irrevocable, worldwide, perpetual, royalty-free, nontransferable, nonexclusive, non-sublicensable license under its copyrights in any IHE profiles and Technical Framework documents, as well as any additional copyrighted materials that will be owned by IHE International and will be made available for use by Member Organizations, to reproduce and distribute (in any and all print, electronic or other means of reproduction, storage or transmission) such IHE Technical Documents.

The licenses covered by this Copyright License are only to those copyrights owned or controlled by IHE International itself. If parts of the Technical Framework are included in products that also include materials owned or controlled by other parties, licenses to use those products are beyond the scope of this IHE document and would have to be obtained from that other party.

9.1 Copyright of Base Standards

IHE technical documents refer to and make use of a number of standards developed and published by several standards development organizations. All rights for their respective base standards are reserved by these organizations. This agreement does not supersede any copyright provisions applicable to such base standards. Copyright license information for frequently referenced base standards is provided below.

9.1.1 DICOM (Digital Imaging and Communications in Medicine)

DICOM® is the registered trademark of the National Electrical Manufacturers Association for its standards publications relating to digital communications of medical information.

9.1.2 HL7 (Health Level Seven)

HL7®, Health Level Seven®, CDA®, CCD®, and FHIR® are registered trademarks of Health Level Seven International.

Health Level Seven, Inc. has granted permission to IHE to reproduce tables from the HL7 standard. The HL7 tables in this document are copyrighted by Health Level Seven, Inc. All rights reserved. Material drawn from these documents is credited where used.

9.1.3 LOINC (Logical Observation Identifiers Names and Codes)

LOINC® is registered United States trademarks of Regenstrief Institute, Inc.

 Copyright © 2021: IHE International, Inc.

9.1.4 SNOMED CT (Systematized Nomenclature of Medicine -- Clinical Terms)

Some IHE Profiles incorporate SNOMED® CT, which is used by permission of the International Health Terminology Standards Development Organisation. SNOMED CT© was originally created by the College of American Pathologists. SNOMED CT is a registered trademark of the International Health Terminology Standards Development Organisation, all rights reserved.

10 Trademark

IHE® and the IHE logo are trademarks of the Healthcare Information Management Systems Society in the United States and trademarks of IHE Europe in the European Community. They may only be used with the written consent of the IHE International Board Operations Committee, which may be given to a Member Organization in broad terms for any use that is consistent with the IHE mission and operating principles.

 Copyright © 2021: IHE International, Inc.

IHE Technical Frameworks General Introduction Appendices

The IHE Technical Framework General Introduction Appendices are components shared by all of the IHE domain technical frameworks. Each technical framework volume contains links to these documents where appropriate.

Update the following appendices to the General Introduction as indicated below. Note that these are not appendices to this domain's Technical Framework (TF-1, TF-2, TF-3 or TF-4) but rather, they are appendices to the IHE Technical Frameworks General Introduction located here.

Appendix A – Actor Summary Definitions

Add the following new or modified actors to the IHE Technical Frameworks General Introduction Appendix A:

New (or modified) Actor Name	Description
Referral Initiator	The provider, organization, or system, which initiates the referral
Referral Recipient	The provider, organization, or system, which will perform the services for which the patient is referred.

Appendix B – Transaction Summary Definitions

Add the following new or modified transactions to the IHE Technical Frameworks General Introduction Appendix B:

New (or modified) Transaction Name and Number	Definition
Referral Request [PCC-55]	Sent from the Referral Initiator to the Referral Recipient. Initiates the referral request, using the 360X transport mechanism, and containing the referral request payload.
Referral Decline [PCC-56]	Sent from the Referral Recipient to the Referral Initiator. Indicates the inability to satisfy the referral request by declining to perform the services requested, and provides the reason for the decline.

 Copyright © 2021: IHE International, Inc.

New (or modified) Transaction Name and Number	Definition
Referral Outcome [PCC-57]	Sent from the Referral Recipient to the Referral Initiator. Contains the outcome of the services performed according to the referral request.
Referral Cancellation [PCC-58]	Sent from the Referral Initiator to the Referral Recipient. Requests a cancellation of an existing referral request.
Interim Consultation Note [PCC-59]	Sent from the Referral Recipient to the Referral Initiator. Contains interim findings based on the services performed according to the referral request.
Appointment Notification [PCC-60]	Sent from the Referral Recipient to the Referral Initiator. Notification of an appointment scheduled by the Referral Recipient according to the referral request.
No-show Notification [PCC-61]	Sent from the Referral Recipient to the Referral Initiator. Notification that the patient did not show up for a scheduled appointment.

Appendix D – Glossary

Add the following new or modified glossary terms to the IHE Technical Frameworks General Introduction Appendix D.

Glossary Term	Definition
Closed loop referral	A closed loop referral is a referral with a definite end-point, when the referral is considered complete. Closed Loop Referral is a subset of *Transition of Care*, where the cooperative provision of care is limited to the *Referral Request* and *Referral Outcome* between two providers. It includes bi-directional information exchange between the *Referral Initiator* and the *Referral Recipient*.
Transition of Care	Transition of Care is defined as the cooperative provision of care by multiple providers, where each provider has part of the responsibility for the patient's wellness.
Referral Request	Referral Request is defined as a request from one provider (Referral Initiator) to another provider (Referral Recipient). The request includes a description of the services the Referral Initiator wants for a patient (i.e., the reason for referral and the specific questions asked).
Related health information	In the context of closed loop referral, related health information is the patient information that is relevant to the referral request, interim findings, or the referral outcome.
Result of Referral	In the context of closed loop referral, the Result of Referral encompasses the Referral Recipient's findings, conclusions, interpretations, and/or impressions of the service performed for the patient. The results are sent from the Referral Recipient to the Referral Initiator at the End of Care.

 Copyright © 2021: IHE International, Inc.

Glossary Term	Definition
End of Care (EOC)	In the context of closed loop referral, the End of Care is determined by the Referral Recipient when no more care is needed to satisfy the reason for the referral; it is when the result of referral is sent to the Referral Initiator.
Referral Outcome	In the context of closed loop referral, the Referral Outcome extends the R*esult of Referral* to include situations where the requisite care was not rendered or was ended before completion. Possible Referral Outcomes include: • The Referral Initiator cancels the referral request (a) before care began or (b) while care was being rendered, but before the care is completed. • The Referral Recipient declines the referral request (a) before beginning to render care or (b) before care has been completed. • The Referral Recipient completes the care and submits the Result of Referral.

425

 Copyright © 2021: IHE International, Inc.

Volume 1 – Profiles

Copyright Licenses

NA

Add the following to the IHE Technical Frameworks General Introduction Copyright section:

Domain-specific additions

NA

Add new Section X

X 360 Exchange Closed Loop Referral (360X) Profile

The goal of this profile is to enable improved care coordination between providers utilizing different Electronic Health Record technology (EHRT) / Health Information technology (HIT) when a patient is referred from one provider to another, and when the expectation is that the patient will eventually return to the referring provider for continued care. In particular, the 360X Profile seeks to enable providers — using existing health data exchange standards and technologies — to exchange:

- referral requests containing relevant patient clinical information
- result of referral containing relevant patient clinical information

from within their EHRT workflow, regardless of the EHRT used. This will allow providers to communicate electronically the related patient information even if utilizing different EHRT/HIT. This scope indicates that the 360X Project includes defining the transport and content of:

- the *Referral Request*
- the *Result of Referral*
- additional information to facilitate the referral process workflow, and the closing of the loop

X.1 360X Actors, Transactions, and Content Modules

This section defines the actors, transactions, and/or content modules in this profile. General definitions of actors are given in the Technical Frameworks General Introduction Appendix A at http://ihe.net/TF_Intro_Appendices.aspx.

 Copyright © 2021: IHE International, Inc.

X.1.1 Actors and Transactions

Figure X.1-1 shows the actors directly involved in the 360X Profile and the relevant transactions between them. If needed for context, other actors that may be indirectly involved due to their participation in other related profiles are shown in dotted lines. Actors that have a mandatory grouping are shown in conjoined boxes.

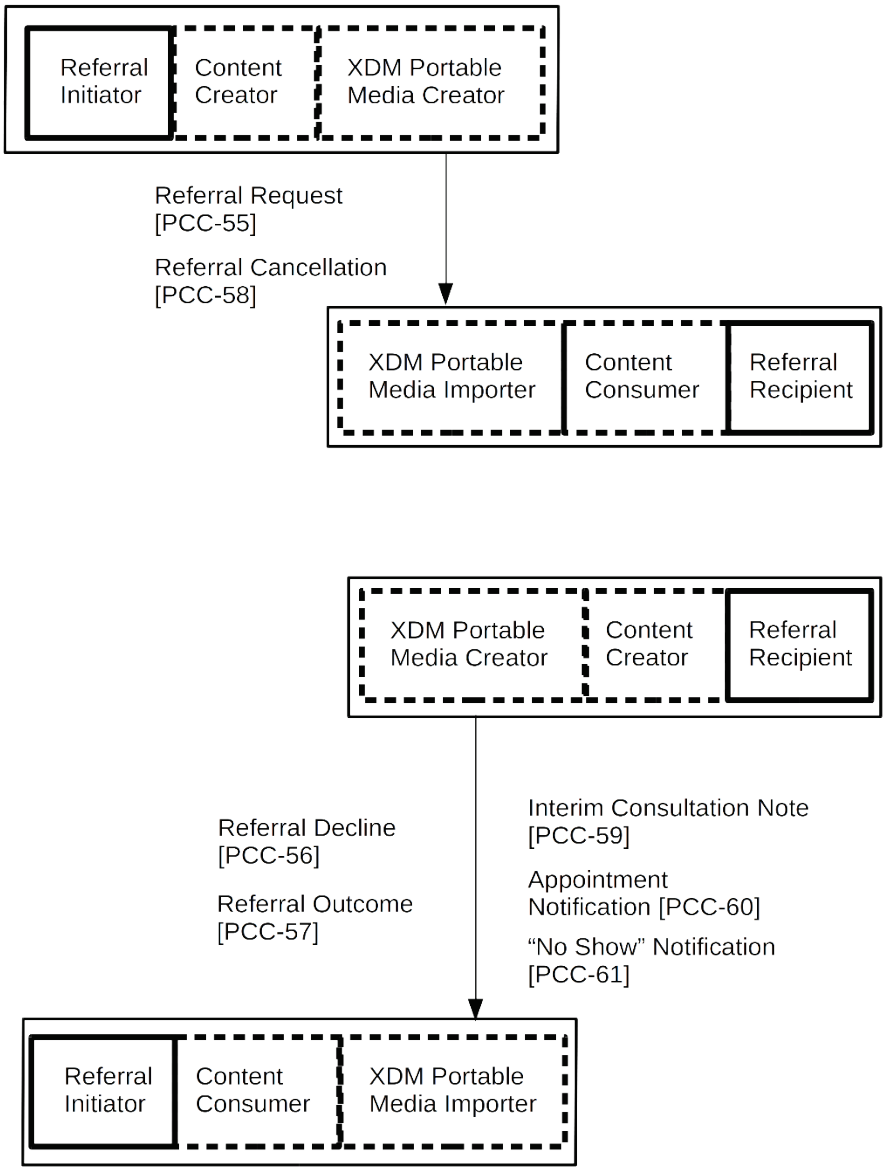

Figure X.1-1: 360X Actor Diagram

 Copyright © 2021: IHE International, Inc.

465 Table X.1-1 lists the transactions for each actor directly involved in the 360X Profile. To claim compliance with this profile, an actor shall support all required transactions (labeled "R") and may support the optional transactions (labeled "O"). Note that receiving an optional transaction that is not supported, must not trigger an error condition.

Table X.1-1: 360X Profile - Actors and Transactions

Actors	Transactions	Actions	Optionality	Reference
Referral Initiator	Referral Request PCC-55]	Send Referral Request / Receive Accept or Decline	R	PCC TF-2: 3.55
	Referral Decline [PCC-56]	Receive Decline of Referral Request	R (see note 1)	PCC TF-2: 3.56
	Referral Outcome [PCC-57]	Receive Referral Outcome	R (See note 1)	PCC TF-2: 3.57
	Referral Cancellation [PCC-58]	Send Request for Cancellation / Receive Cancellation Confirmation	O (See note 2)	PCC TF-2: 3.58
	Interim Consultation Note [PCC-59]	Receive Interim Consultation Note	R	PCC TF-2: 3.59
	Appointment Notification [PCC-60]	Receive Appointment Notification	O	PCC TF-2: 3.60
	No-Show Notification [PCC-61]	Receive "No Show" Notification	O	PCC TF-2: 3.61
Referral Recipient	Referral Request PCC-55]	Receive Referral Request / Send Accept or Decline	R	PCC TF-2: 3.55
	Referral Decline [PCC-56]	Send Decline of Referral Request	O (see note 3)	PCC TF-2: 3.56
	Referral Outcome [PCC-57]	Send Referral Outcome	R	PCC TF-2: 3.57
	Referral Cancellation [PCC-58]	Receive Request for Cancellation / Send Cancellation Confirmation	O (see note 4)	PCC TF-2: 3.58
	Interim Consultation Note [PCC-59]	Send Interim Consultation Note	O	PCC TF-2: 3.59
	Appointment Notification [PCC-60]	Send Appointment Notification	O	PCC TF-2: 3.60
	No-Show Notification [PCC-61]	Send "No Show" Notification	O	PCC TF-2: 3.61

470 Note 1: When transaction 56 or 57 is received by the Referral Initiator, this signifies the end of the referral process, and it should be represented correspondingly in the initiator's system.

Note 2: A Referral Initiator may not have a workflow where a cancellation of the referral request is needed; that is why transaction 58 is optional. If transaction 58 is supported, then the Referral Initiator must support receiving a Cancellation Confirmation message, which signifies the end of the referral process (see note 1).

 Copyright © 2021: IHE International, Inc.

Note 3: A Referral Recipient must support sending a decline message as the initial response to a received referral request, if there is a reason that it cannot be accepted. Transaction 56 provides the optional ability of the Referral Recipient to send a decline message even after the referral request was initially accepted.

Note 4: A Referral Recipient may operate in a context where they cannot interrupt the referral process when they receive a request for cancellation message, and this is why receiving transaction 58 is optional. Even if in some circumstances the Referral Recipient can receive and process transaction 58, there is no requirement that a cancellation confirmation must always be sent, due to the timing of the cancellation request, for example.

X.1.2 Content Modules

Figure X.1-2 shows the actors engaged in content sharing in the 360X Profile and the direction that the content is exchanged.

As already described in Figure X.1-1, the actors from this profile are grouped with the Content Creator and Content Consumer Actors. The grouping of the content modules described in this profile to specific actors is described in more detail in the "Required Actor Groupings" section below.

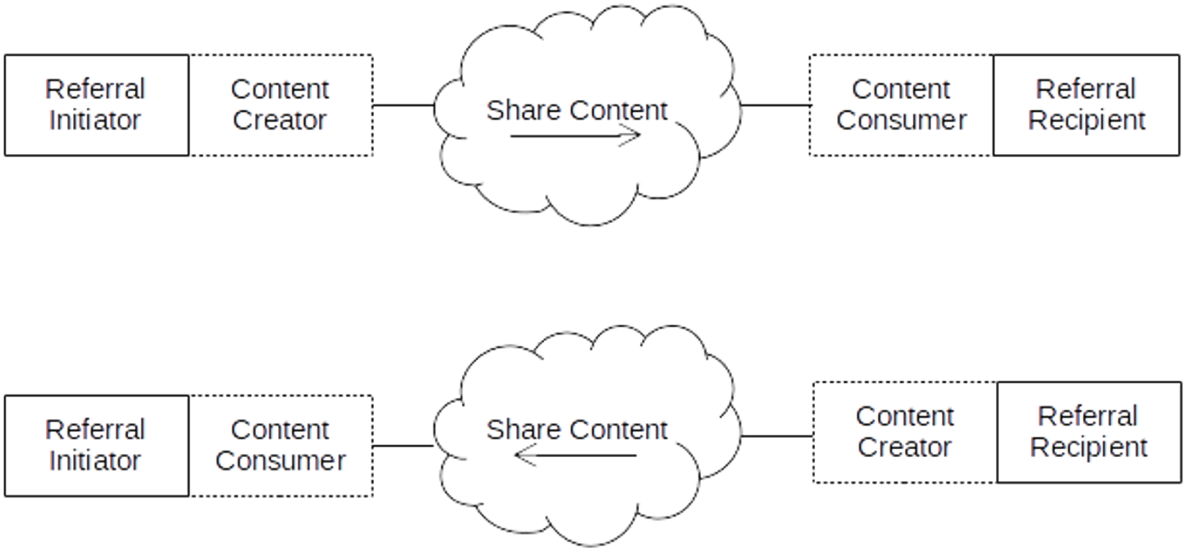

Figure X.1-2: 360X Actor Diagram

Table X.1-2 lists the content options defined in the 360X Profile. To claim support with this profile, an actor shall support at least one of the listed options. Note that the required actor groupings add a requirement for the Content Consumer to support the Document Import Option for the corresponding option.

Table X.1-2: 360X Profile - Actors and Content Options

Actors	Content Option	Optionality	Reference
Referral Initiator/Content Creator	XDS-MS Referral Summary Option	O	PCC TF-2: 6.3.1.3
	C-CDA Option	O	C-CDA 2.1 IG

 Copyright © 2021: IHE International, Inc.

Actors	Content Option	Optionality	Reference
Referral Initiator/Content Consumer	XPHR Option	O	PCC TF-2: 6.3.1.5
	C-CDA Option	O	C-CDA 2.1 IG
Referral Recipient/Content Consumer	XDS-MS Referral Summary Option	O	PCC TF-2: 6.3.1.3
	C-CDA Option	O	C-CDA 2.1 IG
Referral Recipient/Content Creator	XPHR Option	O	PCC TF-2: 6.3.1.5
	C-CDA Option	O	C-CDA 2.1 IG

Note: A Referral Initiator SHALL support either the XDS-MS Referral Summary Option and XPHR Option, or the C-CDA Option, or both. A Referral Recipient SHALL support either the XDS-MS Referral Summary Option and XPHR Option, or the C-CDA Option, or both.

X.1.3 Actor Descriptions and Actor Profile Requirements

Most requirements are documented in Transactions (Volume 2) and Content Modules (Volume 3). This section documents any additional requirements on the 360X Profile's actors.

X.1.3.1 Referral Initiator

The Referral Initiator starts the closed loop referral by sending a referral request to the Referral Recipient. Once the referral request is sent, the Referral Initiator must be able to receive and process an acceptance or a decline.

If the referral is accepted, the Referral Initiator must still be able to accept and process a subsequent decline. The Referral Initiator must be able to receive and process an Interim Consultation Note, if one is sent by the Referral Recipient, as well as a Referral Outcome.

The Referral Initiator must accept all the optional transactions that may be sent by the Referral Recipient, but there is no requirement to process them.

If the Referral Initiator is able to send a Cancelation Request during any part of the workflow, it must be able to receive and process a Cancellation Confirmation, and it also must be able to proceed in a deterministic manner if the Referral Recipient sends a transaction different from a Cancellation Confirmation.

The Referral Initiator, as a Content Consumer, must implement the Document Import Option (see PCC TF-2: 3.1.2) for all CDA document types based on the supported content option(s), and may implement the Section Import Option (PCC TF-2: 3.1.3), and/or the Discrete Data Import Option (PCC TF-2: 3.1.3).

The following requirements apply to the Referral Initiator for all transactions:

The Referral Initiator shall provide a **unique patient identifier** with the initial referral request, and must use the same patient identifier in any subsequent communications throughout a single referral information exchange. This identifier shall be present in the metadata for the XD* submission set and document entries, and in the PID segment of the HL7 V2 messages. The identifier should be present in the CDA document header.

 Copyright © 2021: IHE International, Inc.

The Referral Initiator MUST use one of two options for the patient identifier:

1. a unique patient identifier known to the Referral Initiator, which may or may not be known to the Referral Recipient. In the XD* Metadata, this identifier shall be present in the sourcePatientId attribute of each and every document entry.

a unique patient identifier commonly known to both the Referral Initiator and the Referral Recipient. The method, by which this knowledge is obtained, is outside the scope of this implementation guide, and it may include communication with other parties, such as a regional HIE, an MPI, etc. In the XD* Metadata, this identifier shall be present in the patientId attribute of the submission set, and the patientId attribute of each and every document entry.

The Referral Initiator shall provide a **unique identifier for the referral** with the initial referral request, and must use the same referral identifier in any subsequent communications throughout a single referral information exchange. This identifier shall be present in the metadata for the XDM submission set and document entries, and in the ORC and OBR segments of the HL7 V2 messages. The identifier should be present in the CDA referral section.

X.1.3.2 Referral Recipient

The Referral Recipient must receive and process a referral request, which is sent by a Referral Initiator, and the Referral Recipient must be able to respond with either an acceptance or a decline.

Once a referral request is accepted, the Referral Recipient must be able to create and send a Referral Outcome. The Referral Recipient must be able to accept a Cancellation request at any point of the workflow, and it must respond with either a Cancellation Confirmation, or with the next step of the workflow.

The Referral Recipient, as a Content Consumer, must implement the Document Import Option (see PCC TF-2: 3.1.2) for all CDA document types based on the content option(s) supported, and may implement the Section Import Option (PCC TF-2: 3.1.3), and/or the Discrete Data Import Option (PCC TF-2: 3.1.3).

The following requirements apply to the Referral Recipient for all transactions:

- The Referral Recipient MUST use the unique patient identifier provided in the initial referral request in any subsequent communications with the Referral Initiator throughout the information exchange for a specific referral. When sent by the Referral Recipient, this identifier shall be present in the patientId metadata attribute for the XDM submission set and the patientId attribute of each and every document entry, and in the PID segment of the HL7 V2 messages. The identifier may be present in the CDA document header.
- The Referral Recipient MAY provide another unique patient identifier in any subsequent communications for the purpose of simplifying future communications between the two systems. Any further use of additional patient identifiers is outside the scope of this profile.

 Copyright © 2021: IHE International, Inc.

- The Referral Recipient shall use the unique referral identifier provided in the initial referral request in any subsequent communications with the Referral Initiator throughout a single referral information exchange. This identifier shall be present in the metadata for the XD submission set and document entries, and in the ORC segment of the HL7 V2 messages. The identifier may be present in the CDA document header.

X.2 360X Options

X.2.1 360X Actor Options

Options that may be selected for each actor in this profile are listed in the Table X.2-1. Dependencies between options when applicable are specified in notes.

Table X.2-1: 360X - Actors and Options

Actor	Option Name	Reference
Referral Initiator	Scheduling Option	PCC TF-1: X.2.1.1
	Section Import Option	PCC TF-2: 3.1.3
	Discrete Data Import Option	PCC TF-2: 3.1.4
	XDR Transport Option	PCC TF-1: X.2.2.1
	MHD Transport Option	PCC TF-1: X.2.2.2
	XDS-MS Referral Summary and XPHR Content Option[2]	PCC TF-1: X.2.3.1
	C-CDA Content Option[2]	PCC TF-1: X.2.3.2
Referral Recipient	Scheduling Option	PCC TF-1: X.2.1.1
	Section Import Option	PCC TF-2: 3.1.3
	Discrete Data Import Option	PCC TF-2: 3.1.4
	XDR Transport Option	PCC TF-1: X.2.2.1
	MHD Transport Option	PCC TF-1: X.2.2.2
	XDS-MS Referral Summary and XPHR Content Option[2]	PCC TF-1: X.2.3.1
	C-CDA Content Option[2]	PCC TF-1: X.2.3.2

Note 1: Both actors must implement the Document Import Option (PCC TF-2: 3.1.2) as Content Consumers of CDA documents. The Section Import and the Discrete Data Import are optional in that case,

Note 2: The actor SHALL select at least one of the Content options

X.2.1.1 360X Scheduling Option

The 360X Scheduling Option provides for simple bare-bones appointment sharing between the entities, which are participating in the referral workflow. In many cases, these entities may have other, more comprehensive means of sharing appointment information; therefore, the 360X Scheduling Option would not be needed.

 Copyright © 2021: IHE International, Inc.

One of the capabilities provided by the Scheduling Option is the notification of a patient no-show for an appointment scheduled as part of the fulfillment of the referral request. It is important to note that when the Scheduling Option is not used, and no other form of scheduling sharing is available, the Referral Recipient can indicate a no-show as the reason for a Referral Decline [PCC-56].

For the Referral Initiator to support the Scheduling Option, it must be able to receive and process the Appointment Notification and the No Show Notification transactions.

For the Referral Recipient to support the Scheduling Option, it must be able to create and send the Appointment Notification and the No Show Notification transactions.

X.2.2 360X Transport Options

The 360X Profile requires the use of the ITI XDM Profile as the base transport mechanism of the 360X. In addition to the base mechanism, this profile also adds the following options for transport mechanisms.

X.2.2.1 XDR Option

The XDR Option replaces the ITI XDM actors and associated transaction with the corresponding XDR actors and associated transaction. See Section X.3.2.

X.2.2.2 MHD Option

The MHD Option replaces the ITI XDM actors and associated transaction with the corresponding MHD actors and associated transaction. See Section X.3.3.

X.2.3 360X Content Options

The content options described below provide the requirements for sharing the clinical information required by the [PCC-55], [PCC-57] and [PCC-59] transactions.

X.2.3.1 XDS-MS Referral Summary and XPHR Option

This option constrains the clinical information sent in [PCC-55] to use the XDS-MS Referral Summary document template (template ID 1.3.6.1.4.1.19376.1.5.3.1.1.3). The XPHR document template (template ID 1.3.6.1.4.1.19376.1.5.3.1.1.5) shall be used in the [PCC-57] and [PCC-59] transactions.

X.2.3.2 C-CDA Option

This option constrains the clinical information to the document templates described in the HL7 Implementation Guide for CDA Release 2: Consolidated CDA Templates for Clinical Notes (US Realm), DSTU Release 2.1. The transaction definition in PCC TF-2: 3.55, PCC TF-2: 3.57, and PCC TF-2: 3.59 contain further discussion on the applicability of individual templates.

 Copyright © 2021: IHE International, Inc.

X.3 360X Actor Groupings

The actor groupings represent the requirements for implementing the 360X Profile. Note that all implementations must implement the required actor groupings, and may implement one or more of the optional actor groupings.

X.3.1 Required Actor Groupings – XDM

The actors of this profile are grouped with both the XDM actors, and the generic Content Consumer and Content Creator Actors (as shown in Figure X.1-1, the 360X Action Diagram).

An actor from this profile (Column 1) shall implement all of the required transactions and/or content modules in this profile ***in addition to*** all of the transactions required for the grouped actor (Column 2).

Section X.5 describes additional groupings that may be of interest for security considerations and Section X.6 describes some optional groupings in other related profiles.

Table X.3-1: 360X - Required Actor Groupings

360X Actor	Actor to be grouped with	Reference	Content Bindings Reference
Referral Initiator	ITI XDM Portable Media Creator with options: ZIP over Email ZIP Over Email Response	ITI TF-1: 16.1 ITI TF-1: 16.2.3 ITI TF-1: 16.2.4	
	ITI XDM Portable Media Importer with options: ZIP over Email ZIP Over Email Response	ITI TF-1: 16.1 ITI TF-1: 16.2.3 ITI TF-1: 16.2.4	
	Content Consumer with Document Import Option	PCC TF-2:3.1.2	See Note 1
Referral Recipient	ITI XDM Portable Media Importer with options: ZIP over Email ZIP Over Email Response	ITI TF-1: 16.1 ITI TF-1: 16.2.3 ITI TF-1: 16.2.4	
	ITI XDM Portable Media Creator with options: ZIP over Email ZIP Over Email Response	ITI TF-1: 16.1 ITI TF-1: 16.2.3 ITI TF-1: 16.2.4	
	Content Consumer with Document Import Option	PCC TF-2:3.1.2	See Note 1

Note 1: The Content Consumer requirements are for the CDA documents described as payload for some of the 360X transactions, and only apply in the case when a patient referral is accepted by the Referral Recipient

X.3.2 Optional Actor Groupings – XDR Option

The XDR Option for 360X replaces the XDM actor grouping with the corresponding XDR actor grouping.

 Copyright © 2021: IHE International, Inc.

An actor from this profile (Column 1) claiming the XDR Option shall implement all of the required transactions and/or content modules in this profile ***in addition to*** all of the transactions required for the grouped actor (Column 2).

Section X.5 describes additional groupings that may be of interest for security considerations and Section X.6 describes some optional groupings in other related profiles.

Table X.3-2: 360X – XDR Actor Groupings

360X Actor	Actor to be grouped with	Reference	Content Bindings Reference
Referral Initiator	ITI XDR Document Source	ITI TF-1: 15.1	
	ITI XDR Document Recipient	ITI TF-1: 15.1	
	Content Consumer with Document Import Option	PCC TF-2:3.1.2	See Note 1
Referral Recipient	ITI XDR Document Recipient	ITI TF-1: 15.1	
	ITI XDR Document Source	ITI TF-1: 15.1	
	Content Consumer with Document Import Option	PCC TF-2:3.1.2	See Note 1

Note 1: The Content Consumer requirements are for the CDA documents described as payload for some of the 360X transactions, and only apply in the case when a patient referral is accepted by the Referral Recipient

X.3.3 Optional Actor Groupings – MHD Option

The MHD Option for 360X replaces the XDM actor grouping with the corresponding MHD actor grouping.

An actor from this profile (Column 1) claiming the MHD Option shall implement all of the required transactions and/or content modules in this profile ***in addition to*** all of the transactions required for the grouped actor (Column 2).

Section X.5 describes additional groupings that may be of interest for security considerations and Section X.6 describes some optional groupings in other related profiles.

Table X.3-3: 360X – MHD Actor Groupings

360X Actor	Actor to be grouped with	Reference	Content Bindings Reference
Referral Initiator	ITI MHD Document Source	ITI TF-1: 33.1	See Note 1
	ITI MHD Document Recipient	ITI TF-1: 33.1	See Note 1
	Content Consumer with Document Import Option	PCC TF-2:3.1.2	See Note 2
Referral Recipient	ITI MHD Document Recipient	ITI TF-1: 33.1	See Note 1
	ITI MHD Document Source	ITI TF-1: 33.1	See Note 1

 Copyright © 2021: IHE International, Inc.

360X Actor	Actor to be grouped with	Reference	Content Bindings Reference
	Content Consumer with Document Import Option	PCC TF-2:3.1.2	See Note 2

Note 1: The MHD Profile supplement for trial implementation is available at IHE.net.

Note 2: The Content Consumer requirements are for the CDA documents described as payload for some of the 360X transactions, and only apply in the case when a patient referral is accepted by the Referral Recipient.

X.4 360X Overview

X.4.1 Concepts

The 360X Profile is a combination of a set of transactions and content modules, which enables the Referral Initiator and the Referral Recipient to exchange clinical information about the patient for whom the referral is made, and to manage the referral workflow at an abstract level.

The following state transition diagrams describe a series of generalizable workflow steps found in outpatient provider settings. These diagrams are used to define the requirements for the transactions in this profile, which allows it to support a diverse range of possible workflow sequences.

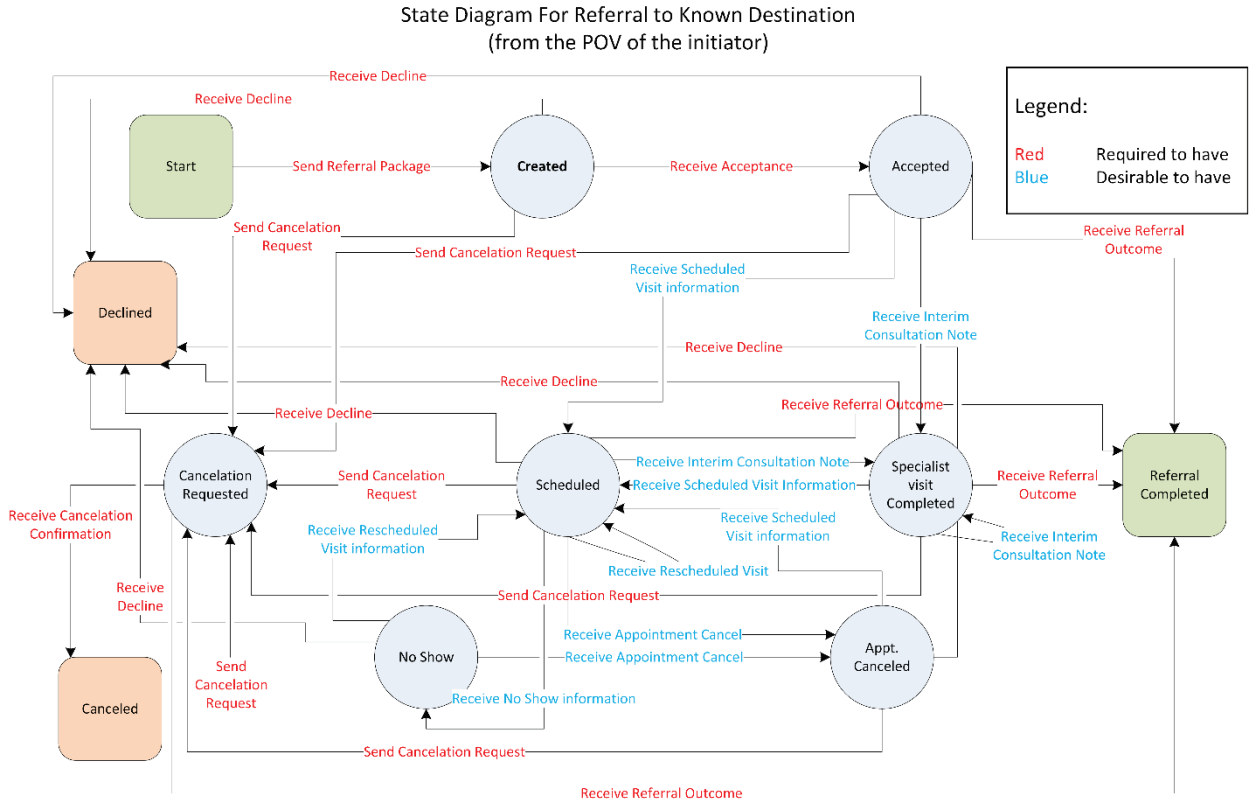

Figure X.4.1-1: 360X State Transitions from the point of view of the Referral Initiator

 Copyright © 2021: IHE International, Inc.

The state transitions from the Referral Initiator's point of view show the possible actions and expectations for the Referral Initiator. It shows that Referral Decline can be received throughout the workflow, and the Referral Initiator must be prepared to deal with these "delayed" declines. Similarly, the Referral Initiator may request a cancelation at any time during the workflow, but the response may not necessarily be a Cancelation Confirmation. For example, the Referral Recipient may be in the process of completing the Referral Request when a Cancelation Request is sent, so instead of a Cancelation Confirmation, the Referral Initiator will receive a Referral Outcome.

The Referral Recipient's possible actions and expectations are shown in the corresponding diagram as well.

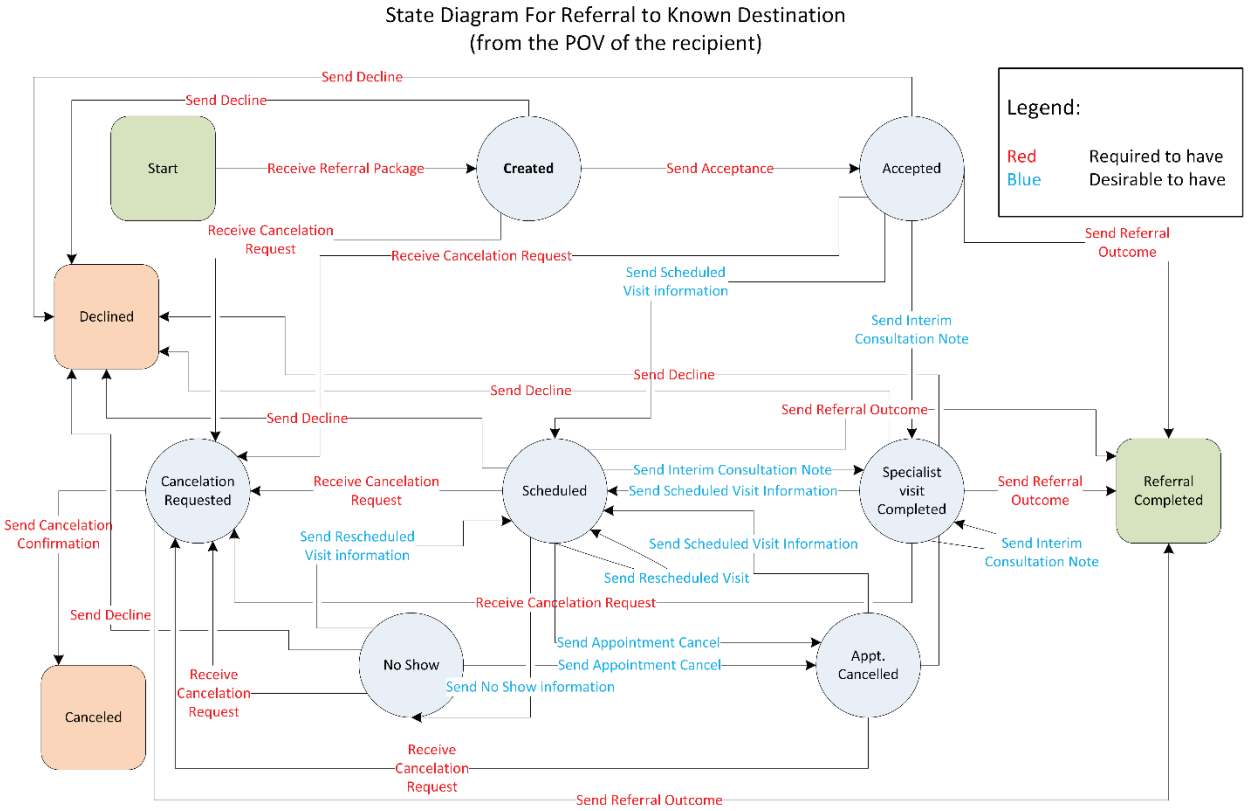

Figure X.4.1-2: 360X State Transitions from the point of view of the Referral Recipient

X.4.2 Use Cases

The 360X Profile targets the use case of a referral from a primary care provider (PCP) to a specialist for ambulatory care consultation. The need to handle a wide variety of workflows that may depend on specialty, practice management, or care setting, however, makes most of the transactions and content applicable to other use cases as well.

 Copyright © 2021: IHE International, Inc.

One key requirement for the closed loop referral is the concept of End of Care, which is when the referral is considered completed. In the case of referrals for continued care, the closing of the loop can still be present even if there is no specific End of Care. In such cases, the loop can be considered closed when the referral has been accepted, and the Referral Outcome is a care plan that is shared with the Referral Initiator.

When there is a secondary referral (specialist to specialist), the 360X Profile covers the process as a new separate referral. In such cases, the communications with the original Referral Initiator (e.g., the PCP) regarding the secondary referral is essential for proper patient care. While deliberate orchestration of these communications is out of scope for this profile, as part of the original referral the Referral Recipient can send an updated plan of care with information about the secondary referral (via either a Referral Outcome, or an Intermediate Consultation Note).

X.4.2.1 Use Case #1: PCP to Specialist

This use case describes the referral of a patient from his PCP to a cardiologist.

X.4.2.1.1 PCP to Specialist Use Case Description

Mr. Packton, age 58, presents to Dr. Allen's office on September 4th, 2017, with complaints of shortness of breath. The patient has a BMI of 30, no history of smoking, no complaints of chest pain, no physical signs of respiratory and cardiac problems, and a familial history of coronary artery disease.

Dr. Allen, his PCP, orders a referral to a cardiologist, stating the clinical question as “Determine the origin of Mr. Packton’s shortness of breath”. Based on the practice's workflows and the PCP's system's handling of referrals, a referral package is created which contains the above noted findings, demographic information, patient history, lab results, and patient insurance.

The referral request is sent to the cardiologist's practice, with the additional indication that the patient is to be seen within a week. The cardiology practice receives the referral request, sends for and receives prior authorization, and based on the practice's workflows and their system's handling of referral requests, an affirmative response to the request is sent to Dr. Allen's practice.

Dr. Brown's office at the cardiology practice calls Mr. Packton, and schedules an appointment on September 7th, 2017. Based on the practice's workflows and their system's handling of referral requests, a notification is sent of the appointment date/time to Dr. Allen. Mr. Packton keeps the appointment with Dr. Brown, and unfortunately he is diagnosed with coronary artery disease and a cardiac catheterization is scheduled.

Dr. Brown's initial consultation note is completed and it is sent to Dr. Allen, answering the clinical question and stating the date of the cardiac catheterization. After the catheterization is performed, the results are reviewed by Dr. Brown, and a final consultation note is sent to Dr. Allen, including a suggested plan of care. Dr. Allen reviews the consultation notes and closes the referral loop.

 Copyright © 2021: IHE International, Inc.

X.4.2.1.2 PCP to Specialist Process Flow

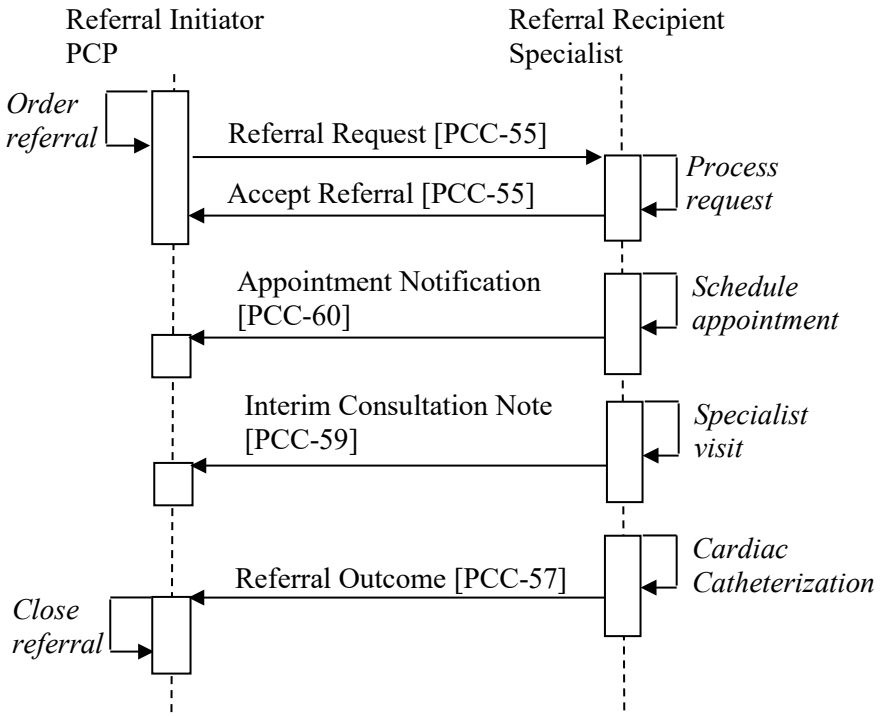

Figure X.4.2.1.2-1: Example Process Flow in the 360X Profile

The process flow shows that the Referral Initiator is limited to sending the initial referral request. While it is possible that there might be further interactions between the Referral Initiator and the Referral Recipient between the acceptance of the referral and the patient's visit with the Referral Recipient, these types of interactions are out of scope for the profile. See Section X.6 for suggestions on how other IHE profiles may be helpful to meet such needs.

X.4.2.2 Use Case #2: Public Health to Specialist

The early hearing detection and intervention (EHDI) clinical protocol needs the ability to communicate follow-up diagnostic evaluation referral and service information between public health and audiological providers and to update the Hearing Plan of Care document as screening, testing, and other interventions are performed.

X.4.2.2.1 Public Health to Specialist Use Case Description

Information flows among providers (birthing facilities, pediatricians and specialists) and public health agencies concerning early hearing detection and intervention (EHDI) have been inconsistent and unreliable. Communicating hearing screening and follow-up information

 Copyright © 2021: IHE International, Inc.

including important next steps and test results for an infant is not done effectively leading to data errors, missed information and missed services.

Newborn hearing screening (NHS) and follow up services are initiated based on public health (PH) guidelines. At birth, the birthing center provider initiates the NHS so that the screening is performed. The screening result, along with other important patient demographic and clinical information, is submitted to the Public Health EHDI program. The Public Health EHDI program generates a Hearing Plan of Care (HPoC) document that includes important next-step care guidelines and sends it to the infant's primary care provider (PCP). Children who do not pass the NHS are referred to follow-up audiological diagnostic tests, either by the PH EHDI program or by the PCP. After the infant receives the recommended audiological diagnostic service, the audiological provider sends the results to PH and the HPoC is updated.

X.4.2.2.2 Public Health to Specialist Process Flow

There are two process flows shown for this use case. The first process flow diagram shows the case when the public health agency sends the referral directly to the audiological provider.

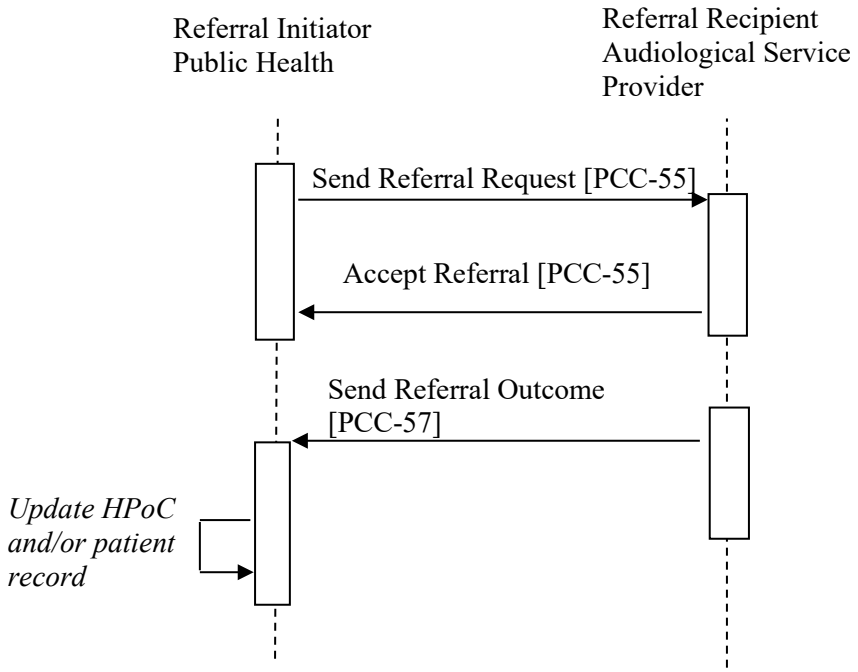

Figure X.4.2.2.2-1: Example Process Flow in the 360X Profile

The second process flow diagram shows how the referral is managed by the PCP.

 Copyright © 2021: IHE International, Inc.

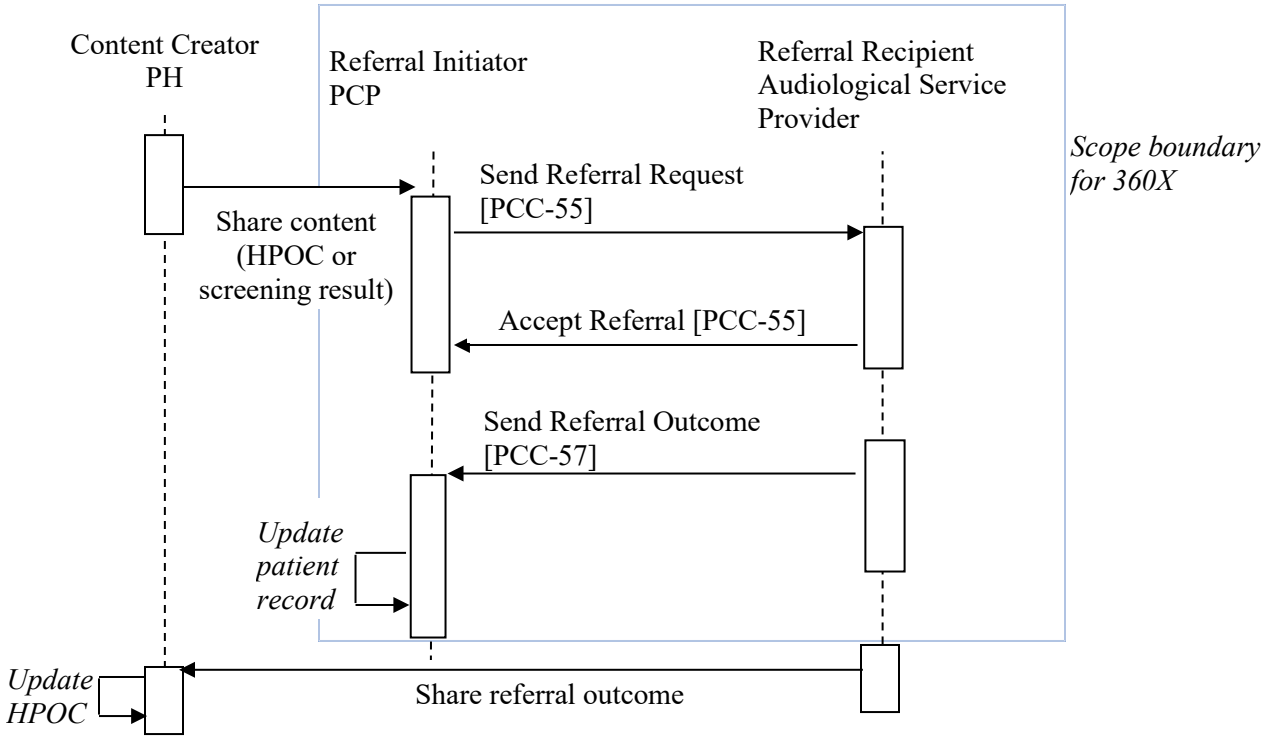

Figure X.4.2.2.2-2: Example Process Flow in the 360X Profile

X.5 360X Security Considerations

The 360X Profile actors are grouped with the Portable Media Creator and Portable Media Importer Actors of the XDM Profile, and requires the ZIP over Email and Zip over Email Response Options. In particular, the use of S-MIME encryption and signature requirements are applied to this profile.

Sections X.1.3.1 and X.1.3.2 address the management of patient and referral identification for the purposes of this profile.

X.6 360X Cross Profile Considerations

X.6.1 ROL – Referral/Order Linking

In cases when there is a need for additional communication from the Referral Initiator to the Referral Recipient, these actors can be grouped together with the Order Placer and Order Filler Actors, respectively, of the ROL Profile. Using the same requirements for patient and referral identification described in Sections X.1.3.1 and X.1.3.2, these additional transactions can communicate information such as additional test results, which have been received by the Referral Initiator before the patient has been seen by the Referral Recipient.

 Copyright © 2021: IHE International, Inc.

X.6.2 XBeR-WD – Cross Enterprise Basic eReferral Workflow Definition

The 360X Profile, and the XBeR-WD Profile share similar use cases, but differ in the way the workflow information is conveyed. The use of Workflow Documents for workflow information, as required by the underlying XWD Profile in XBeR-WD, is not supported by the current HIT infrastructure in the US. The 360X Profile uses HL7 V2 messages, which have been well established in areas like laboratory, pathology, and radiology order workflows, including in implementation guides required by US national initiatives (e.g., the LOI and LRI implementation guides).

 Copyright © 2021: IHE International, Inc.

Appendices

None

 Copyright © 2021: IHE International, Inc.

Volume 2 – Transactions

Add Section 3.55

3.55 Referral Request [PCC-55]

3.55.1 Scope

This transaction is used to initiate the referral workflow by providing the referral workflow information and the relevant clinical information known to the Referral Initiator.

3.55.2 Actor Roles

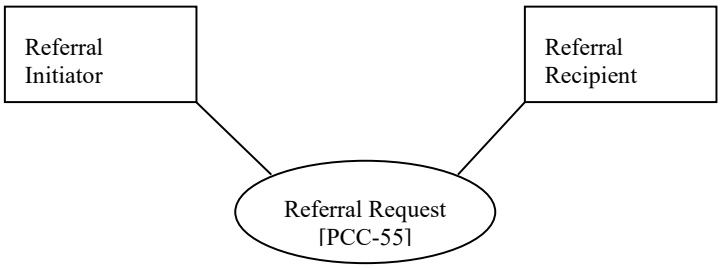

Figure 3.55.2-1: Use Case Diagram

Table 3.55.2-1: Actor Roles

Actor:	Referral Initiator
Role:	The provider who ordered the referral
Actor:	Referral Recipient
Role:	The provider who is acting on the referral

3.55.3 Referenced Standards

HL7 Messaging standard, version 2.5.1 Chapters 2, 4

HL7 Messaging standard, version 2.9 Chapter 4

HL7 Implementation Guide for CDA Release 2: Consolidated CDA Templates for Clinical Notes (US Realm) DSTU Release 2.1

 Copyright © 2021: IHE International, Inc.

3.55.4 Messages

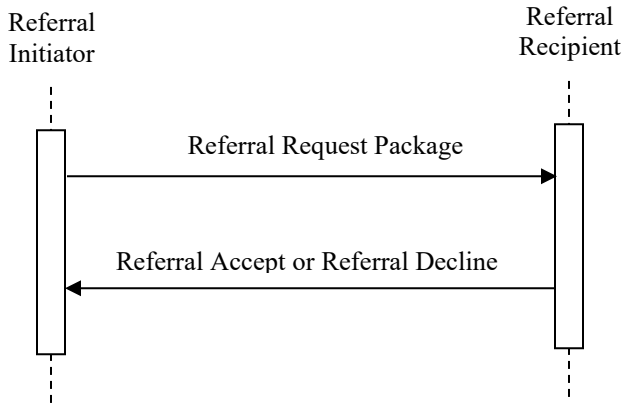

Figure 3.55.4-1: Interaction Diagram

3.55.4.1 Referral Request Package

The Referral Request Package is sent by the Referral Initiator to the Referral Recipient to request a particular healthcare service to be performed, usually a consultation.

3.55.4.1.1 Trigger Events

A Referral Request Package is sent upon the ordering of the referral by the Referral Initiator. The exact event and timing can vary based on the practice-specific rules or regulations. For example, the Referral Request Package can be sent immediately as a result of the provider ordering the referral, or as a result of the provider closing the encounter which contains the referral order, or the referral may be further processed by the provider's staff and sent after an appropriate review and administrative actions (e.g., pre-authorization obtained).

3.55.4.1.2 Message Semantics

This message is an XDM package constructed following the rules described in the XDM Profile, transaction [ITI-32], ITI TF-2: 3.32. The current transaction, [PCC-55], adds the following constraints:

- Only a single submission set shall be present in the XDM package (ITI TF-2: 3.32.4.1.2)
- Only "simple part" documents shall be allowed in the XDM package (ITI TF-2: 3.32.4.1.2.2).

 Copyright © 2021: IHE International, Inc.

The Referral Request XDM package contains two Document Entries – an HL7 V2 OMG^O19^OMG_O19 message and a CDA clinical document.

3.55.4.1.2.1 Message Content – Metadata

The metadata in the XDM package is constrained for the purposes of Closed Loop Referral as described in the following sections for Submission Set and Document Entries.

3.55.4.1.2.1.1 Submission Set

The table contains all required (R) Submission Set attributes from the XD* Metadata Specification, as well as any "required if known" (R2) or optional (O) attributes, where 360X imposes a specific constraint or connection to the content of a Document Entry. These specific constraints are indicated in the Requirement column as the "Source of requirement".

Table 3.55.4-1: 360X Submission Set Attributes

Attribute	Purpose within 360X	Requirement (Source of requirement)	Value and Source
author	The entity which created the submission set, including the Referral Initiator's electronic address or endpoint	R (XDR and XDM for Direct Messaging)	The e-mail address of the Referral Initiator is placed in the authorTelecommunication slot of the author classification.
contentTypeCode	Defines the submission set as part of a referral.	R (360X)	LOINC Code 57133-1 is used to indicate that this Submission Set is part of a referral
entryUUID	The identifier used for referencing the Submission Set object within the metadata	R (IHE)	Assigned by the Referral Initiator when the Submission Set was created
intendedRecipient	The entity for which the Submission set is intended	R (XDR and XDM for Direct Messaging)	The Direct address of the Referral Recipient.
patientId	The patient ID known to the Referral Recipient. How the Referral Initiator obtains this information is out of scope for this profile. This value, if present, must be the same for the Submission Set, and the Document Entries within it.	R2 (XDR and XDM for Direct Messaging)	See PCC TF-1: X.1.3.1 for description on how patient identity is conveyed between the Referral Initiator and the Referral Recipient
sourceId	Globally unique identifier representing the entity which created the submission set. Usually an organizational identifier.	R (IHE)	An OID.

 Copyright © 2021: IHE International, Inc.

Attribute	Purpose within 360X	Requirement (Source of requirement)	Value and Source
submissionTime	Represents the point in time at the creating entity when the Submission Set was created.	R (IHE)	Timestamp in UTC
uniqueId	Globally unique identifier assigned to the submission set by its creator.	R	An OID.
referenceIdList	The referenceIdList contains the referral ID, as described in PCC TF-1: X.1.3.1	R (360X)	This attribute is currently only defined by IHE for the Document Entry metadata. Since it is a Slot, however, it is not prohibited from being added to the Submission Set metadata. format: 134467653^^^&1.2.3.4.5.42.1&ISO^urn:ihe:iti:xds:2013:referral

3.55.4.1.2.1.2 Document Entry for Referral Order

The table contains all required (R) Document Entry attributes from the XD* Metadata Specification, as well as any "required if known" (R2) or optional (O) attributes, where 360X imposes a specific constraint or connection to the content of the Document Entry. These specific constraints are indicated in the Requirement column as the "Source of requirement".

Table 3.55.4-2: 360X Document Entry Attributes for Referral Order

Attribute	Purpose within 360X	Requirement (Source of requirement)	Corresponding HL7 Field/Component/Subcomponent
author	If supplied, MUST indicate the clinician who is requesting the referral.	R2 (XDR and XDM for Direct Messaging)	Ordering Provider in ORC-12
classCode	Identifies the specific document type, in this case an HL7 V2 Order.	R (360X) (R2 XDR and XDM for Direct Messaging)	Message Type in MSH-9.1 value: OMG name: General clinical order message coding scheme: 2.16.840.1.113883.18.30

 Copyright © 2021: IHE International, Inc.

Attribute	Purpose within 360X	Requirement (Source of requirement)	Corresponding HL7 Field/Component/Subcomponent
confidentialityCode	Identifies the confidentiality defined for the order. Implementations SHOULD NOT use codes that reveal the specific trigger causes of confidentiality (e.g., ETH, HIV, PSY, SDV)	R2 (XDR and XDM for Direct Messaging)	Confidentiality Code in ORC-28 Implementations SHOULD constrain to values that do not reflect the cause of confidentiality such as: V Very restricted R Restricted U Usual control
creationTime	Defines the creation time of the order message (as opposed to the order itself)	R2 (XDR and XDM for Direct Messaging)	Date/Time of Message in MSH-7. In the metadata the timestamp shall be in UTC time.
entryUUID	The identifier used for referencing the Document Entry object within the metadata	R (XDR and XDM for Direct Messaging)	N/A
formatCode	The specific format for the message	R (360X)	Based on MSH-9.1 and MSH-9.2 value: urn:ihe:pcc:360x:hl7:OMG:O19:2017 name: General clinical order coding scheme: 1.3.6.1.4.1.19376.1.2.3
hash	SHA-1 hash of the content	R (XDM)	N/A
healthcareFacilityTypeCode	See also practice setting type. This code represents the type of organizational setting of the clinical encounter during which the documented act occurred. Note that in context of 360X, this is the facility type of the Referral Request Initiator.	R2 (XDR and XDM for Direct Messaging)	May be derived from / mapped to the information in ORC-21 through 24
languageCode	Specifies the language of the document (order / referral request)	R2 (XDR and XDM for Direct Messaging)	Principal Language of Message in MSH-19
mimeType	The MIME type of the message, indicating that it is plain text (ASCII or utf-8), formatted according to the HL7 V2 rules.	R	x-application/hl7-v2+er7

 Copyright © 2021: IHE International, Inc.

Attribute	Purpose within 360X	Requirement (Source of requirement)	Corresponding HL7 Field/Component/Subcomponent
patientId	The patient ID known to the Referral Recipient. How the Referral Initiator obtains this information is out of scope for this profile. This value, if present, must be the same for the Submission Set, and the other Document entries See PCC TF-1: X.1.3.1	R2 (360X) (R2 XDR and XDM for Direct Messaging)	PID-3
practiceSettingCode	Identifies the setting that created the order at a high granularity e.g., Cardiology, Family Practice. Should not create ambiguity as compared to healthcareFacilityTypeCode.	R2 (XDR and XDM for Direct)	May be derived from / mapped to the information in ORC-21 through 24
size	Size in bytes of the message as it exists in the file system when the contents of ZIP package are extracted	R (XDM)	N/A
sourcePatientId	The sourcePatientId is the ID as known by the Referral Initiator. See PCC TF-1: X.1.3.1	R2 (360X)	PID-3
sourcePatientInfo	Demographics information for the patient for whom the referral is made. The demographics information should be used by the Referral Recipient for patient identity matching and verification.	R2 (XDM)	The values from PID-5 (Patient Name), PID-7 (Patient DOB), PID-8 (Patient Sex), and PID-11 (Patient Address) should be used.
typeCode	Further refines classCode – in this case defines the specific HL7 V2 message structure, for this message it is OMG_O19	R (360X)	MSH-9.3 value: OMG_O19 name: General clinical order message structure coding system: 2.16.840.1.113883.18.214
uniqueId	Globally unique identifier assigned to the document by its creator.	R	N/A May be based on Message Control ID in MSH-10
URI	The file name in the ZIP file structure containing the order message	R (XDM)	N/A
referenceIdList	Contains the referral ID See PCC TF-1: X.1.3.1	R (360X)	Derived from ORC-2 (Placer Order Number). 134467653^^^&1.2.3.4.5.42.1&ISO^urn:ihe:iti:xds:2013:referral

 Copyright © 2021: IHE International, Inc.

Attribute	Purpose within 360X	Requirement (Source of requirement)	Corresponding HL7 Field/Component/Subcomponent
objectType	The object type distinguishes between stable and dynamic documents. Only stable documents are used in XDM, and therefore in 360X	R	N/A fixed to urn:uuid:7edca82f-054d-47f2-a032-9b2a5b5186c1

830 #### 3.55.4.1.2.1.3 Document Entry for Clinical Documentation

The table contains all required (R) Document Entry attributes, as well as any "required if known" (R2) or optional (O) attributes, where 360X imposes a specific constraint or connection to the content of the Document Entry.

The corresponding source information from the CDA Header for each metadata attribute is
835 already described in PCC TF-2:4.1.1, XDSDocumentEntry Metadata.

Table 3.55.4-3: 360X Document Entry Attributes for Clinical Documents

Attribute	Purpose within 360X	Requirement (Source of requirement)	Corresponding CDA XML element or attribute
author	If supplied, MUST match the author of the CDA	R2 (XDR and XDM for Direct Messaging)	/ClinicalDocument/author
classCode	Identifies the specific document code, as specified in the CDA document	R (360X) (R2 XDR and XDM for Direct Messaging)	The same as /ClinicalDocument/code/@code
confidentialityCode	Identifies the confidentiality defined for the order. Implementations SHOULD NOT use codes that reveal the specific trigger causes of confidentiality (e.g., ETH, HIV, PSY, SDV)	R2 (XDR and XDM for Direct Messaging)	/ClinicalDocument/confidentialityCode/@code Implementations SHOULD constrain to values that do not reflect the cause of confidentiality such as: V Very restricted R Restricted U Usual control
creationTime	Defines the creation time of the CDA (as opposed to the order or the submission set)	R2 (XDR and XDM for Direct Messaging)	/ClinicalDocument/effectiveTime Date/Time of the CCDA. In the metadata, the timestamp shall be in UTC.
entryUUID	The identifier used for referencing the Document Entry object within the metadata	R (XDR and XDM for Direct Messaging)	N/A

 Copyright © 2021: IHE International, Inc.

Attribute	Purpose within 360X	Requirement (Source of requirement)	Corresponding CDA XML element or attribute
formatCode	The specific format of the message	R (360X)	The format code defined for the specific CDA document template: urn:ihe:pcc:xds-ms:2007 or urn:hl7-org:sdwg:ccda-structuredBody:2.1
hash	SHA-1 hash of the content	R (XDM)	N/A
healthcareFacilityTypeCode	See also practice setting type. This code represents the type of organizational setting of the clinical encounter documented in the CDA. Note that in context of 360X, this is the facility type of the Referral Request Initiator.	R2 (XDR and XDM for Direct Messaging)	Must be consistent with /ClinicalDocument/author
languageCode	Specifies the language of the document (order / referral request)	R2 (XDR and XDM for Direct Messaging)	/ClinicalDocument/languageCode
mimeType	The MIME type of the document	R	text/xml
patientId	The patient ID known to the Referral Recipient. How the Referral Initiator obtains this information is out of scope for this profile. This value, if present, must be the same for the Submission Set, and the other Document entries See PCC TF-1: X.1.3.1	R2 (360X) (R2 XDR and XDM for Direct Messaging)	This identifier may be present in /ClinicalDocument/recordTarget/patientRole/id
practiceSettingCode	Identifies the setting that created the document at a high granularity e.g., Cardiology, Family Practice. Should not create ambiguity as compared to healthcareFacilityTypeCode.	R2 (XDR and XDM for Direct)	N/A
size	Size in bytes of the message as it exists in the file system when the contents of ZIP package are extracted	R (XDM)	N/A
sourcePatientId	The sourcePatientID is the ID as known by the Referral Initiator. See PCC TF-1: X.1.3.1	R2 (360X)	The patient ID in /ClinicalDocument/recordTarget/patientRole/id, formatted in the CX data type format

 Copyright © 2021: IHE International, Inc.

Attribute	Purpose within 360X	Requirement (Source of requirement)	Corresponding CDA XML element or attribute
sourcePatientInfo	Demographics information for the patient for whom the referral is made. The demographics information should be used by the Referral Recipient for patient identity matching and verification.	R2 (XDM)	The information corresponding the fields PID-5 (Patient Name), PID-7 (Patient DOB), PID-8 (Patient Sex), and PID-11 (Patient Address) can be found in /ClinicalDocument/recordTarget/patientRole
typeCode	Further refines classCode – in this case it is the same as the CDA document code	R (360X)	/ClinicalDocument/code/
uniqueId	Globally unique identifier assigned to the document by its creator.	R	/ClinicalDocument/id
URI	The file name in the ZIP file structure containing the order message	R (XDM)	N/A
referenceIdList	Contains the referral ID See PCC TF-1: X.1.3.1	R (360X)	
objectType	The object type distinguishes between stable and dynamic documents. Only stable documents are used in XDM, and therefore in 360X	R	N/A fixed to urn:uuid:7edca82f-054d-47f2-a032-9b2a5b5186c1

3.55.4.1.2.2 Message Content – Referral Order

The referral order is an HL7 Version 2 OMG^O19^OMG_O19 message. The complete message definition can be found in the 360X HL7 V2 Message Payload Definition (chapters 3 to 5). The Document Entry metadata for this message is described in Section 3.55.4.1.2.1.2.

A table containing only the required segments and fields can be found as part of the 360X project implementation Guide at https://oncprojectracking.healthit.gov/wiki/display/TechLab360X/360X+Implementation+Guide#id-360XImplementationGuide-6.3.2MessageOMG^O19_OMG_O19.

The following fields are further defined for the purposes of the Referral Request:

Table 3.55.4-4: 360X Referral Order fields

Data element	Message Field	Required?	Format and use
Order Control Code	ORC-1	R	The value of NW shall be used for the referral request
Referral ID	ORC-2 and OBR-2	R	<referral ID>^^<assigning authority OID>^ISO

 Copyright © 2021: IHE International, Inc.

Data element	Message Field	Required?	Format and use
Ordering provider	ORC-12 and OBR-16	R	The referring provider. Providers should be identified using their NPI. Matches the Submission Set author in the metadata of the referral request.
Service Duration	TQ1-6	O	The length of time for which a referral is valid. Note that the presence of a validity time period should not affect the timeliness of the accept or decline response.
Expected service provision time	TQ1-8	R2	When a referral request has an associated urgency, this date/time field shall reflect the date or time by which the referral shall be performed. Concepts like "Urgent", "ASAP", etc. have different meaning for different settings or specialties; therefore the Referral Initiator's system shall convert such concepts to a date (and optionally a time) by which the requested service is expected to be performed, or in the cases of referrals where multiple visits may be required, the first visit is completed.
Total occurrences	TQ1-14	O	Optional information on the number of service units ordered as part of this referral.
Service identifier	OBR-4	R	The default value is the 57133-1 LOINC code – referral note. It may contain any other entry from the ReferralDocumentType Value set as defined in Table 54 of the C-CDA implementation guide. This should generally match the /ClinicalDocument/code of the CDA document type.
Reason for Referral	OBR-31	R	This field is used to convey the reason(s) for the referral. This corresponds to the Reason for Referral section in the CDA payload (for the C-CDA Option, template id urn:hl7ii:1.3.6.1.4.1.19376.1.5.3.1.3.1:2014-06-09). Multiple reasons for referral shall be conveyed as repetitions in this field. If the primary reason is coded, SNOMED CT [Problem Value Set urn:oid:2.16.840.1.113883.3.88.12.3221.7.4] is the preferred value set to use, If the primary reason is free text then use only OBR-31.2
Referral question indicator	OBX-3	O	A LOINC code (TBD?) to identify the OBX value as a referral question
Referral question	OBX-5	O	A referral question may be necessary to further qualify the reason(s) for referral. If there is such a question, the OBX segment shall be present to convey it.
Indicator for question regarding the order	OBX-11	O	Fixed to 'O'
Indication that this is a question from place to filler	OBX-29	O	Fixed to 'QST'

3.55.4.1.2.3 Message Content – Clinical Information

The clinical information for the referral is conveyed via a CDA document. For each 360X content option, the following CDA document templates are specified for use in a referral request.

 Copyright © 2021: IHE International, Inc.

3.55.4.1.2.3.1 XDS-MS Referral Summary Option

The Referral Initiator who claims support for this option shall include a XDS-MS Referral Summary document in the Referral Request package. The structure and content for the XDS-MS Referral Summary document template (template ID 1.3.6.1.4.1.19376.1.5.3.1.1.3) are defined in PCC TF-2 6.3.1.3.

The Referral Recipient who claims support for this option shall be able to receive, store and allow users to access the contents of the XDS-MS Referral Summary document.

3.55.4.1.2.3.2 Consolidated CDA (C-CDA) Option

The HL7 Implementation Guide for CDA Release 2: Consolidated CDA Templates for Clinical Notes (US Realm) DSTU Release 2.1 has multiple document templates defined. The following table shows the available document templates, and their use as payload for transaction [PCC-55]. RC means recommended, O means optional, and N/A (Not Applicable) means that the particular document type is not to be used in the Referral Request [PCC-55] transaction.

Table 3.55.4-5: 360X US National Extension Document Content Modules

Document Content Modules	Template ID (/ClinicalDocument/templateid)	Use	Reference
Care Plan	@root: 2.16.840.1.113883.10.20.22.1.15 @extension: 2015-08-01	O	C-CDA Section 1.1.2
Consultation Note	@root: 2.16.840.1.113883.10.20.22.1.4 @extension: 2015-08-01	N/A	C-CDA Section 1.1.3
Continuity of Care Document (CCD)	@root: 2.16.840.1.113883.10.20.22.1.2 @extension: 2015-08-01	RC	C-CDA Section 1.1.5
Diagnostic Imaging Report	@root: 2.16.840.1.113883.10.20.22.1.5 @extension: 2014-06-09	N/A	C-CDA Section 1.1.7
Discharge Summary	@root: 2.16.840.1.113883.10.20.22.1.8 @extension: 2015-08-01	N/A	C-CDA Section 1.1.9
History and Physical	@root: 2.16.840.1.113883.10.20.22.1.3 @extension: 2015-08-01	O	C-CDA Section 1.1.11
Operative Note	@root: 2.16.840.1.113883.10.20.22.1.7 @extension: 2015-08-01	N/A	C-CDA Section 1.1.13
Procedure Note	@root: 2.16.840.1.113883.10.20.22.1.6 @extension: 2015-08-01	N/A	C-CDA Section 1.1.15
Progress Note	@root: 2.16.840.1.113883.10.20.22.1.9 @extension: 2015-08-01	O	C-CDA Section 1.1.17
Referral Note	@root: 2.16.840.1.113883.10.20.22.1.14 @extension: 2015-08-01	RC	C-CDA Section 1.1.19
Transfer Summary	@root: 2.16.840.1.113883.10.20.22.1.13 @extension: 2015-08-01	O	C-CDA Section 1.1.20

 Copyright © 2021: IHE International, Inc.

Document Content Modules	Template ID (/ClinicalDocument/templateid)	Use	Reference
Unstructured Document	@root: 2.16.840.1.113883.10.20.22.1.10 @extension: 2015-08-01	N/A	C-CDA Section 1.1.21

The Referral Recipient who claims support for this option shall be able to receive, store and allow users to access the contents of any of the recommended (RC) or Optional (O) documents from this table.

The Referral Note document template is recommended, as its purpose is aligned most closely with the referral request. It requires the Reason for Referral section template (template ID root 1.3.6.1.4.1.19376.1.5.3.1.3.1, template ID extension 2014-06-09).

The Continuity of Care Document (CCD) template is recommended as it is one of the most widespread implemented document types. It is an open template, and it SHOULD contain a Reason for Referral section when used as a payload of the Referral Request [PCC-55] transaction.

The document templates in this list provide a hierarchy of implementation choices for the Content Creator:

- If possible, create a Referral Note
- If already able to create CCDs, use the CCD template with the addition of the Reason for Referral section template
- If already able to create CCDs without the capability for additional sections, use the CCD as is
- If any other document template, marked as O (optional) in the table above is more applicable to a specific referral workflow, use that document template.

Whenever used, the Reason for Referral section SHALL contain a Patient Referral Act entry template (template ID root 2.16.840.1.113883.10.20.22.4.140). The entry/act/id element SHALL contain the same referral ID as the one present in the metadata, and in the HL7 V2 message payload of the transaction.

3.55.4.1.3 Expected Actions

The message indicates the request for a referral. Upon receiving the message, the Referral Recipient's system is expected to extract the payload, and provide the appropriate information about the request to the person or persons who can determine whether the referral will be accepted or declined (for example, render the Direct message received as being of type Referral Request). Based on the business relationship and/or additional cross-organizational agreements, it is possible that the Referral Recipient would automatically accept any request from a particular Referral Initiator.

 Copyright © 2021: IHE International, Inc.

Within a reasonable time period (which is based on each organization's rules and operation requirements) the Referral Recipient SHALL respond with either an Accept or Decline message. If the Referral Initiator does not receive a response from the Referral Recipient within the expected time period, they shall take action to determine whether the referral can proceed as requested. The specific action is out of scope for this transaction, and may include a phone call, some other type of communication with the Referral Recipient, or cancelling the referral.

3.55.4.2 Referral Accept

The Referral Accept message indicates that the Referral Recipient has accepted the responsibility for providing the requested services.

3.55.4.2.1 Trigger Events

The message is triggered once the Referral Recipient makes the decision to accept the referral request. The exact manner and timing of how and when the message is generated is not further specified by this transaction.

3.55.4.2.2 Message Semantics

This message is an XDM package constructed following the rules described in the XDM Profile, transaction [ITI-32], ITI TF-2: 3.32. The current transaction, [PCC-55], adds the following constraints:

- Only a single submission set shall be present in the XDM package (ITI TF-2: 3.32.4.1.2)
- Only "simple part" documents shall be allowed in the XDM package (ITI TF-2: 3.32.4.1.2.2).

The Referral Accept XDM package contains a single HL7 V2 OSU^O51^OSU_O51 message.

3.55.4.2.2.1 Message Content – Metadata

The metadata in the XDM package is constrained for the purposes of Closed Loop Referral as described in the following sections for Submission Set and Document Entries.

3.55.4.2.2.1.1 Submission Set

The table contains all required (R) Submission Set attributes, as well as any "required if known" (R2) or optional (O) attributes, where 360X imposes a specific constraint or connection to the content of a Document Entry.

 Copyright © 2021: IHE International, Inc.

925 **Table 3.55.4-6: 360X Submission Set Attributes**

Attribute	Purpose within 360X	Requirement (Source of requirement)	Value and Source
author	The entity which created the submission set, including the Referral Recipient's Direct address	R (XDR and XDM for Direct Messaging)	The Direct address of the Referral Recipient is placed in the authorTelecommunication slot of the author classification.
contentTypeCode	Defines the submission set as part of a referral.	R (360X)	LOINC Code 57133-1 is used to indicate that this Submission Set is part of a referral
entryUUID	The identifier used for referencing the Submission Set object within the metadata	R (IHE)	Assigned by the Referral Recipient when the Submission Set was created
intendedRecipient	The entity for which the Submission set is intended	R (XDR and XDM for Direct Messaging)	The Direct address of the Referral Initiator.
patientId	The patient ID known to the Referral Initiator. This is either the value of the patientId attribute from the Referral Request, or the value of the sourcePatientId attribute. This value must be the same for the Submission Set, and the Document Entries within it.	R (360X)	See PCC TF-1: X.1.131 for description on how patient identity is conveyed between the Referral Initiator and the Referral Recipient
sourceId	Globally unique identifier representing the entity which created the submission set. Usually an organizational identifier.	R (IHE)	An OID.
submissionTime	Represents the point in time at the creating entity when the SubmissionSet was created.	R (IHE)	Timestamp in UTC
uniqueId	Globally unique identifier assigned to the submissions set by its creator.	R	An OID.
referenceIdList	The referenceIdList contains the referral ID, as described in PCC TF-1: X.1.3.1	R (360X)	This attribute is currently only defined by IHE for the Document Entry metadata. Since it is a Slot, however, it is not prohibited from being added to the Submission Set metadata.

 Copyright © 2021: IHE International, Inc.

3.55.4.2.2.1.2 Document Entry for Referral Order Status Update

The table contains all required (R) Document Entry attributes, as well as any "required if known" (R2) or optional (O) attributes, where 360X imposes a specific constraint or connection to the content of the Document Entry.

Table 3.55.4-7: 360X Document Entry Attributes for Status Update

Attribute	Purpose within 360X	Requirement (Source of requirement)	Corresponding HL7 Field/Component/Subcomponent
author	If supplied, MUST indicate the entity, which is accepting to the referral request.	R2 (XDR and XDM for Direct Messaging)	
classCode	Identifies the specific document type, in this case an HL7 V2 Order Status Update.	R (360X) (R2 XDR and XDM for Direct Messaging)	Message Type in MSH-9.1 value: OSU name: Order status update message coding system: 2.16.840.1.113883.18.30
confidentialityCode	Identifies the confidentiality defined for the order. Implementations SHOULD NOT use codes that reveal the specific trigger causes of confidentiality (e.g., ETH, HIV, PSY, SDV)	R2 (XDR and XDM for Direct Messaging)	Confidentiality Code in ORC-28 Implementations SHOULD constrain to values that do not reflect the cause of confidentiality such as: V Very restricted R Restricted U Usual control
creationTime	Defines the creation time of the order message (as opposed to the order itself)	R2 (XDR and XDM for Direct Messaging)	Date/Time of Message in MSH-7. In the metadata the timestamp shall be in UTC time.
entryUUID	The identifier used for referencing the Document Entry object within the metadata	R (XDR and XDM for Direct Messaging)	N/A
formatCode	The specific format for the message	R (360X)	Based on MSH-9.1 and MSH-9.2 value: urn:ihe:pcc:360x:hl7:OSU:O51:2017 name: Order status update coding system: 1.3.6.1.4.1.19376.1.2.3
hash	SHA-1 hash of the content	R (XDM)	N/A
healthcareFacilityTypeCode	See also practice setting type. This code represents the type of organizational setting which accepted the referral request.	R2 (XDR and XDM for Direct Messaging)	May be derived from / mapped to the information in ORC-21 through 24

 Copyright © 2021: IHE International, Inc.

Attribute	Purpose within 360X	Requirement (Source of requirement)	Corresponding HL7 Field/Component/Subcomponent
languageCode	Specifies the language of the document (order / referral request)	R2 (XDR and XDM for Direct Messaging)	Principal Language of Message in MSH-19
mimeType	The MIME type of the message, indicating that it is plain text (ASCII or utf-8), formatted according to the HL7 V2 rules.	R	x-application/hl7-v2+er7
patientId	The patient ID known to the Referral Initiator. This is either the value of the patientId attribute from the Referral Request, or the value of the sourcePatientId attribute. This value must be the same for the Submission Set, and the other Document entries. See PCC TF-1: X.1.3.1	R (360X)	PID-3
practiceSettingCode	Identifies the setting that created the order at a high granularity e.g., Cardiology, Family Practice. Should not create ambiguity as compared to healthcareFacilityTypeCode.	R2 (XDR and XDM for Direct)	
size	Size in bytes of the message as it exists in the file system when the contents of the ZIP package are extracted	R (XDM)	N/A
sourcePatientId	The sourcePatientID is the ID as known by the Referral Recipient. Adding this attribute is useful for enabling future unrelated communications about this patient between the Initiator and Recipient. See PCC TF-1: X.1.3.1	R2 (360X)	PID-3
sourcePatientInfo	Demographics information for the patient for whom the referral is made. Adding this attribute is useful for enabling future unrelated communications about this patient between the Initiator and Recipient.	R2 (XDM)	The values from PID-5 (Patient Name), PID-7 (Patient DOB), PID-8 (Patient Sex), and PID-11 (Patient Address) should be used.
typeCode	Further refines classCode – in this case defines the specific HL7 V2 message structure, for this message it is OSU_O51	R (360X)	MSH-9.3 value: OSU_O51 name: Order status update message structure coding system: 2.16.840.1.113883.18.214

 Copyright © 2021: IHE International, Inc.

Attribute	Purpose within 360X	Requirement (Source of requirement)	Corresponding HL7 Field/Component/Subcomponent
uniqueId	Globally unique identifier assigned to the document by its creator.	R	N/A May be based on Message Control ID in MSH-10
URI	The file name in the ZIP file structure containing the order message	R (XDM)	N/A
referenceIdList	Contains the referral ID. See PCC TF-1: X.1.3.1	R (360X)	Derived from ORC-2 (Placer Order Number).
objectType	The object type distinguishes between stable and dynamic documents. Only stable documents are used in XDM, and therefore in 360X	R	N/A fixed to urn:uuid:7edca82f-054d-47f2-a032-9b2a5b5186c1

3.55.4.2.2.2 Message Content – Referral Status Update

The content of the Referral Accept message is an HL7 Version 2 OSU^O51^OMG_O51 Order Status Update message. The complete message definition can be found in the 360X HL7 V2 Message Payload Definition (Chapters 3 to 5).

A table containing only the required segments and fields can be found as part of the 360X project implementation Guide at https://oncprojectracking.healthit.gov/wiki/display/TechLab360X/360X+Implementation+Guide#id-360XImplementationGuide-6.3.3MessageOSU^O51^OSU_O51.

The following fields are further defined for the purpose of the Referral Accept:

Table 3.55.4-8: 360X Status Update Fields

Data element	Message Field	Format and use
Order Control Code	ORC-1	The value of OK shall be used for the referral accept
Referral ID	ORC-2	<referral ID>^^<assigning authority OID>^ISO
Order status	ORC-5	The value of IP shall be used for the referral accept
Ordering provider	ORC-12	The referring provider shall not be echoed back in the status update message. This field must be empty.

3.55.4.2.3 Expected Actions

When the Referral Accept Message is received, the Referral Initiator's system shall reflect that the Referral Recipient has taken the responsibility for providing the requested service. This information should be appropriately presented to users of the Referral Initiator's system who have access to the patient record.

 Copyright © 2021: IHE International, Inc.

After successfully sending the Referral Accept message, the Referral Recipient's system should also appropriately reflect the referral as being accepted, and guide the users to the next steps of their internal workflow according to established processes and regulatory requirements.

3.55.4.3 Referral Decline

The Referral Decline message conveys the inability of the Referral Recipient to provide the services requested.

3.55.4.3.1 Trigger Events

The message is triggered when the Referral Recipient determines that they cannot provide the requested service. The reason for the decline is also sent as part of this message.

3.55.4.3.2 Message Semantics

This message is an XDM package constructed following the rules described in the XDM Profile, transaction [ITI-32], ITI TF-2: 3.32. The current transaction, [PCC-55], adds the following constraints:

- Only a single submission set shall be present in the XDM package (ITI TF-2: 3.32.4.1.2)
- Only "simple part" documents shall be allowed in the XDM package (ITI TF-2: 3.32.4.1.2.2).

The Referral Decline XDM package contains a single HL7 V2 OSU^O51^OSU_O51 message.

3.55.4.3.2.1 Message Content – Metadata

The metadata in the XDM package is constrained for the purposes of Closed Loop Referral as described in the following sections for Submission Set and Document Entries.

3.55.4.3.2.1.1 Submission Set

The table contains all required (R) Submission Set attributes, as well as any "required if known" (R2) or optional (O) attributes, where 360X imposes a specific constraint or connection to the content of a Document Entry.

Note: The Submission Set metadata is identical to the metadata described in Section 3.55.4.2.2.1.1, Table 3.55.4-6. It is provided here for completeness and to make the reading of the specification easier.

 Copyright © 2021: IHE International, Inc.

Table 3.55.4-9: 360X Submission Set Attributes

Attribute	Purpose within 360X	Requirement (Source of requirement)	Value and Source
author	The entity which created the submission set, including the Referral Recipient's Direct address.	R (XDR and XDM for Direct Messaging)	The Direct address of the Referral Recipient is placed in the authorTelecommunication slot of the author classification.
contentTypeCode	Defines the submission set as part of a referral.	R (360X)	LOINC Code 57133-1 is used to indicate that this Submission Set is part of a referral.
entryUUID	The identifier used for referencing the Submission Set object within the metadata.	R (IHE)	Assigned by the Referral Recipient when the Submission Set was created.
intendedRecipient	The entity for which the Submission set is intended.	R (XDR and XDM for Direct Messaging)	The Direct address of the Referral Initiator.
patientId	The patient ID known to the Referral Initiator. This is either the value of the patientId attribute from the Referral Request, or the value of the sourcePatientId attribute. This value must be the same for the Submission Set, and the Document Entries within it.	R (360X)	See PCC TF-1: X.1.3.1 for description on how patient identity is conveyed between the Referral Initiator and the Referral Recipient.
sourceId	Globally unique identifier representing the entity which created the submission set. Usually an organizational identifier.	R (IHE)	An OID.
submissionTime	Represents the point in time at the creating entity when the SubmissionSet was created.	R (IHE)	Timestamp in UTC.
uniqueId	Globally unique identifier assigned to the submission set by its creator.	R	An OID.
referenceIdList	The referenceIdList contains the referral ID, as described in PCC TF-1: X.1.3.1.	R (360X)	This attribute is currently only defined by IHE for the Document Entry metadata. Since it is a Slot; however, it is not prohibited from being added to the Submission Set metadata.

 Copyright © 2021: IHE International, Inc.

3.55.4.3.2.1.2 Document Entry for Referral Status Update

The table contains all required (R) Document Entry attributes, as well as any "required if known" (R2) or optional (O) attributes, where 360X imposes a specific constraint or connection to the content of the Document Entry.

Note: The Document Entry metadata is identical to the metadata described in Section 3.55.4.2.2.1.2, Table 3.55.4-7. It is provided here for completeness and to make the reading of the specification easier.

Table 3.55.4-10: 360X Submission Set Attributes

Attribute	Purpose within 360X	Requirement (Source of requirement)	Corresponding HL7 Field/Component/Subcomponent
author	If supplied, MUST indicate the clinician who is requesting the referral.	R2 (XDR and XDM for Direct Messaging)	
classCode	Identifies the specific document type, in this case an HL7 V2 Order Status Update.	R (360X) (R2 XDR and XDM for Direct Messaging)	Message Type in MSH-9.1 value: OSU name: Order status update message coding system: 2.16.840.1.113883.18.30
confidentialityCode	Identifies the confidentiality defined for the order. Implementations SHOULD NOT use codes that reveal the specific trigger causes of confidentiality (e.g., ETH, HIV, PSY, SDV)	R2 (XDR and XDM for Direct Messaging)	Confidentiality Code in ORC-28 Implementations SHOULD constrain to values that do not reflect the cause of confidentiality such as: V Very restricted R Restricted U Usual control
creationTime	Defines the creation time of the order message (as opposed to the order itself)	R2 (XDR and XDM for Direct Messaging)	Date/Time of Message in MSH-7. In the metadata the timestamp shall be in UTC time.
entryUUID	The identifier used for referencing the Document Entry object within the metadata	R (XDR and XDM for Direct Messaging)	N/A
formatCode	The specific format for the message	R (360X)	Based on MSH-9 urn:ihe:pcc:360x:hl7:OSU:O51:2017
hash	SHA-1 hash of the content	R (XDM)	N/A
healthcareFacilityTypeCode	See also practice setting type. This code represents the type of organizational setting which accepted the referral request.	R2 (XDR and XDM for Direct Messaging)	May be derived from / mapped to the information in ORC-21 through 24

 Copyright © 2021: IHE International, Inc.

Attribute	Purpose within 360X	Requirement (Source of requirement)	Corresponding HL7 Field/Component/Subcomponent
languageCode	Specifies the language of the document (order / referral request)	R2 (XDR and XDM for Direct Messaging)	Principal Language of Message in MSH-19
mimeType	The MIME type of the message, indicating that it is plain text (ASCII or utf-8), formatted according to the HL7 V2 rules.	R	x-application/hl7-v2+er7
patientId	The patient ID known to the Referral Initiator. This is either the value of the patientId attribute from the Referral Request, or the value of the sourcePatientId attribute. This value must be the same for the Submission Set, and the other Document entries See PCC TF-1: X.1.3.1	R (360X)	PID-3
practiceSettingCode	Identifies the setting that created the order at a high granularity e.g., Cardiology, FamilyPractice. Should not create ambiguity as compared to healthcareFacilityTypeCode.	R2 (XDR and XDM for Direct)	
size	Size in bytes of the message as it exists in the file system when the contents of ZIP package are extracted	R (XDM)	N/A
sourcePatientId	The sourcePatientID is the ID as known by the Referral Recipient. Adding this attribute is useful for enabling future unrelated communications about this patient between the Initiator and Recipient. See PCC TF-1: X.1.3.1	R2 (360X)	PID-3
sourcePatientInfo	Demographics information for the patient for whom the referral is made. Adding this attribute is useful for enabling future unrelated communications about this patient between the Initiator and Recipient.	R2 (XDM)	The values from PID-5 (Patient Name), PID-7 (Patient DOB), PID-8 (Patient Sex), and PID-11 (Patient Address) should be used.
typeCode	Further refines classCode – in this case defines the specific HL7 V2 message structure, for this message it is OSU_O51	R (360X)	MSH-9.3 value: OSU_O51 name: Order status update message structure coding system: 2.16.840.1.113883.18.214

 Copyright © 2021: IHE International, Inc.

Attribute	Purpose within 360X	Requirement (Source of requirement)	Corresponding HL7 Field/Component/Subcomponent
uniqueId	Globally unique identifier assigned to the document by its creator.	R	N/A May be based on Message Control ID in MSH-10
URI	The file name in the ZIP file structure containing the order message	R (XDM)	N/A
referenceIdList	Contains the referral ID See PCC TF-1: X.1.3.1	R (360X)	Derived from ORC-2 (Placer Order Number).
objectType	The object type distinguishes between stable and dynamic documents. Only stable documents are used in XDM, and therefore in 360X	R	N/A fixed to urn:uuid:7edca82f-054d-47f2-a032-9b2a5b5186c1

3.55.4.3.2.2 Message Content – Referral Status Update

The content of the Referral Decline message is an HL7 Version 2 OSU^O51^OMG_O51 Order Status Update message. The complete message definition can be found in the 360X HL7 V2 Message Payload Definition (chapters 3 to 5).

A table containing only the required segments and fields can be found as part of the 360X project implementation Guide at https://oncprojectracking.healthit.gov/wiki/display/TechLab360X/360X+Implementation+Guide#id-360XImplementationGuide-6.3.3MessageOSU^O51^OSU_O51.

The following fields are specific to the Referral Decline:

Table 3.55.4-11: 360X Status Update Fields

Data element	Message Field	Format and use
Order Control Code	ORC-1	The value of UA shall be used for the Referral Decline
Referral ID	ORC-2	<referral ID>^^<assigning authority OID>^ISO
Order status	ORC-5	The value of CA shall be used for the Referral Decline
Ordering provider	ORC-12	The referring provider shall not be echoed back in the status update message. This field must be empty.
Reason for decline	ORC-16	This field is required for the Referral Decline message. At a minimum, a free text reason SHOULD be supplied in ORC-16.2.

3.55.4.3.3 Expected Actions

When the Referral Decline Message is received, the Referral Initiator's system shall reflect that the Referral Request has been declined, and that another Referral Request [PCC-55] needs to be created with a new unique referral ID if the patient is referred again. How this is handled internally in the Referral Initiator's system is out of scope for the profile, however, this

 Copyright © 2021: IHE International, Inc.

information should be appropriately presented to system users who have the required access to the patient record.

After successfully sending the Referral Decline message, the Referral Recipient's system should also appropriately reflect the decline of the referral request. Based on the Recipient's established processes and regulatory requirements, the patient information contained in the referral request should be treated according to the policies and procedures when care is not going to be provided to the patient.

3.55.5 Security Considerations

The security requirements for the XDM Profile, and the "ZIP over Email" and "Zip over Email Response" Options apply to this transaction.

3.55.5.1 Security Audit Considerations

NA

3.55.5.2 Referral Recipient Specific Security Considerations

When receiving the Referral Request Package, it is important to consider the inclusion of the reason for referral information in the HL7 OMG^O19^OMG_O19 message, which is clinical information, and subject to the same rules and access controls as the Reason for Referral Section in the CDA document.

In the case where the referral request is declined, the patient information may have been viewed or processed in various ways in the Referral Recipient's systems. The Referral Recipient's organization shall have well defined policies and procedures on how to treat that information if care is not going to be provided to the patient.

 Copyright © 2021: IHE International, Inc.

Add Section 3.56

3.56 Referral Decline [PCC-56]

3.56.1 Scope

This transaction is used to convey the inability of the Referral Recipient to provide the requested service after the Referral Recipient had already accepted the request.

3.56.2 Actor Roles

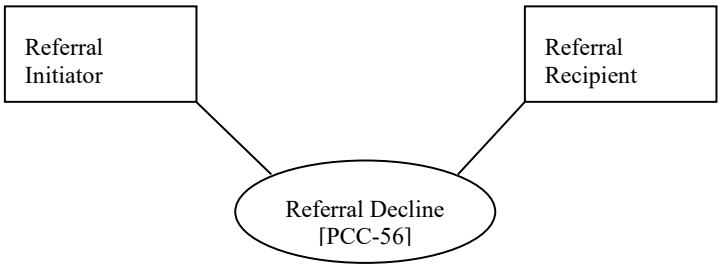

Figure 3.56.2-1: Use Case Diagram

Table 3.56.2-1: Actor Roles

Actor:	Referral Initiator
Role:	The provider who ordered the referral
Actor:	Referral Recipient
Role:	The provider who is acting on the referral

3.56.3 Referenced Standards

HL7 Messaging standard, version 2.5.1 Chapters 2, 4

HL7 Messaging standard, version 2.9 Chapter 4

3.56.4 Messages

 Copyright © 2021: IHE International, Inc.

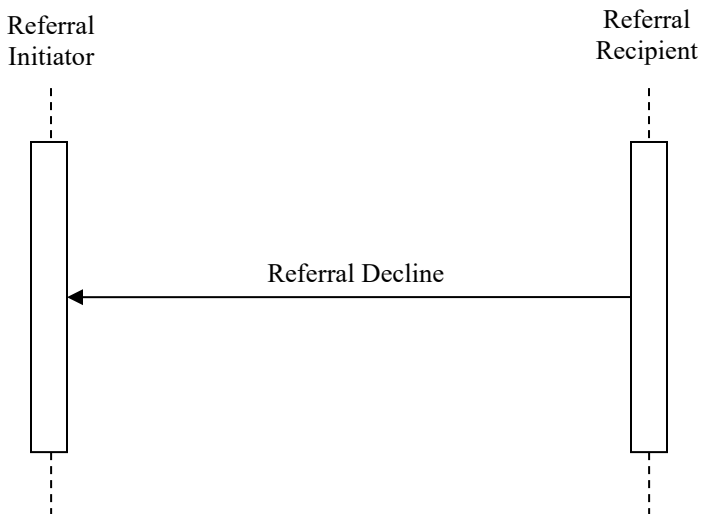

Figure 3.56.4-1: Interaction Diagram

1040 **3.56.4.1 Referral Decline**

The message is the same as 3.55.4.3.

3.56.4.1.1 Trigger Events

In certain cases, it is possible for a Referral Recipient to determine that they cannot provide, or can no longer provide the services requested by the Referral Initiator. In such cases, a Referral
1045 Decline message is used to convey that information. Among the reasons for a decline can be "Cannot contact patient", "Patient refused care", "Patient no-show" (if the Scheduling Option is not used).

3.56.4.1.2 Message Semantics

The message semantics are identical to 3.55.4.3.2

1050 **3.56.4.1.3 Expected Actions**

Sending a Referral Decline after an initial acceptance is usually an exceptional occurrence; therefore the Referral Recipient's policies and procedures should provide guidance when that is appropriate, and what other steps need to be taken in order to provide good patient care (e.g., additional communications with the Referral Initiator or suggestions for alternative service
1055 provider).

 Copyright © 2021: IHE International, Inc.

3.56.5 Security Considerations

The security requirements for the XDM Profile, and the “ZIP over Email” and “Zip over Email Response” Options apply to this transaction.

3.56.5.1 Security Audit Considerations

1060 NA

 Copyright © 2021: IHE International, Inc.

Add Section 3.57

3.57 Referral Outcome [PCC-57]

3.57.1 Scope

This transaction is used to convey the outcome of the referral, and that completes the referral process. This transaction contains both the indication that the referral is complete, and the final clinical information provided by the Referral Recipient.

3.57.2 Actor Roles

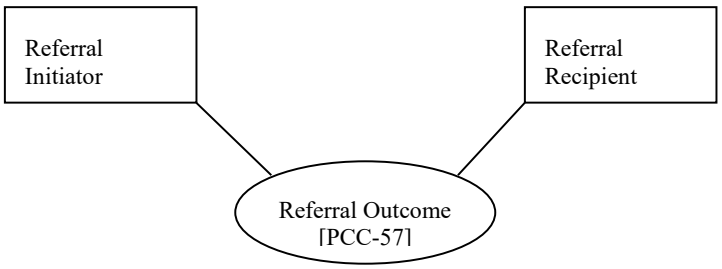

Figure 3.57.2-1: Use Case Diagram

Table 3.57.2-1: Actor Roles

Actor:	Referral Initiator
Role:	The provider who ordered the referral
Actor:	Referral Recipient
Role:	The provider who is acting on the referral

3.57.3 Referenced Standards

HL7 Messaging standard, version 2.5.1 Chapters 2, 4

HL7 Messaging standard, version 2.9 Chapter 4

HL7 Implementation Guide for CDA Release 2: Consolidated CDA Templates for Clinical Notes (US Realm) DSTU Release 2.1

 Copyright © 2021: IHE International, Inc.

3.57.4 Messages

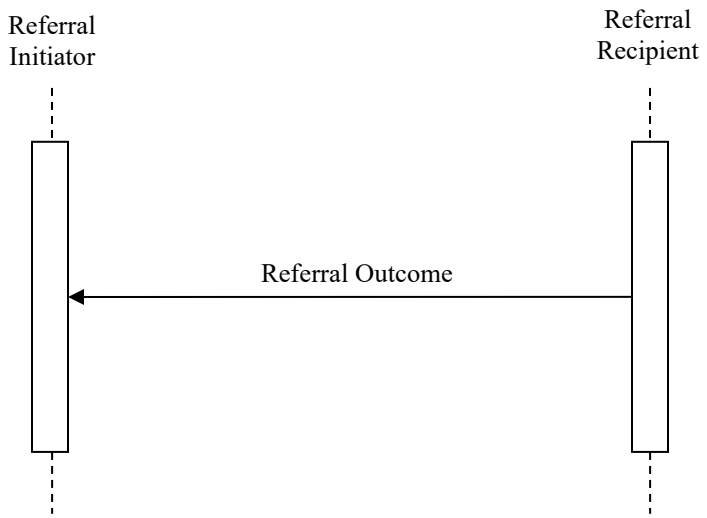

1080 **Figure 3.57.4-1: Interaction Diagram**

3.57.4.1 Referral Outcome Package

The Referral Outcome Package conveys the completion of the referral by the Referral Recipient. It contains both the indication that the referral is complete, and the clinical outcome of the referral presented in a clinical document.

1085 ##### 3.57.4.1.1 Trigger Events

The Referral Outcome Package is sent upon completion of the service, which was requested by the Referral Initiator.

3.57.4.1.2 Message Semantics

This message is an XDM package constructed following the rules described in the XDM Profile,
1090 transaction [ITI-32], ITI TF-2: 3.32. The current transaction, [PCC-57], adds the following constraints:

- Only a single submission set shall be present in the XDM package (ITI TF-2: 3.32.4.1.2)
- Only “simple part” documents shall be allowed in the XDM package (ITI TF-2: 3.32.4.1.2.2).

1095 The Referral Outcome XD* package contains two Document Entries – an HL7 V2 OSU^O51^OSU_O51 message and a CDA document.

 Copyright © 2021: IHE International, Inc.

3.57.4.1.2.1 Message Content – Metadata

3.57.4.1.2.1.1 Submission Set

The table contains all required (R) Submission Set attributes, as well as any "required if known" (R2) or optional (O) attributes, where 360X imposes a specific constraint or connection to the content of a Document Entry.

Note: The Submission Set metadata is identical to the metadata described in Section 3.55.4.2.2.1.1, Table 3.55.4-6. It is provided here for completeness and to make the reading of the specification easier.

Table 3.57.4-1: 360X Submission Set Attributes

Attribute	Purpose within 360X	Requirement (Source of requirement)	Value and Source
author	The entity which created the submission set, including the Referral Recipient's Direct address	R (XDR and XDM for Direct Messaging)	The Direct address of the Referral Recipient is placed in the authorTelecommunication slot of the author classification.
contentTypeCode	Defines the submission set as part of a referral.	R (360X)	LOINC Code 57133-1 is used to indicate that this Submission Set is part of a referral
entryUUID	The identifier used for referencing the Submission Set object within the metadata	R (IHE)	Assigned by the Referral Recipient when the Submission Set was created
intendedRecipient	The entity for which the Submission set is intended	R (XDR and XDM for Direct Messaging)	The Direct address of the Referral Initiator.
patientId	The patient ID known to the Referral Initiator. This is either the value of the patientId attribute from the Referral Request, or the value of the sourcePatientId attribute. This value must be the same for the Submission Set, and the Document Entries within it.	R (360X)	See PCC TF-1: X.1.3.1 for description on how patient identity is conveyed between the Referral Initiator and the Referral Recipient
sourceId	Globally unique identifier representing the entity which created the submission set. Usually an organizational identifier.	R (IHE)	An OID.
submissionTime	Represents the point in time at the creating entity when the SubmissionSet was created.	R (IHE)	Timestamp in UTC

 Copyright © 2021: IHE International, Inc.

Attribute	Purpose within 360X	Requirement (Source of requirement)	Value and Source
uniqueId	Globally unique identifier assigned to the submission set by its creator.	R	An OID.
referenceIdList	The referenceIdList contains the referral ID, as described in PCC TF-1: X.1.3.1	R (360X)	This attribute is currently only defined by IHE for the Document Entry metadata. Since it is a Slot, however, it is not prohibited from being added to the Submission Set metadata.

3.57.4.1.2.1.2 Document Entry for Referral Status Update

The table contains all required (R) Document Entry attributes, as well as any "required if known" (R2) or optional (O) attributes, where 360X imposes a specific constraint or connection to the content of the Document Entry.

Note: The Document Entry metadata is identical to the metadata described in Section 3.55.4.2.2.1.2, Table 3.55.4-7, with the exception of the author attribute. It is provided here for completeness and to make the reading of the specification easier.

Table 3.57.4-2: 360X Document Entry Attributes for Status Update

Attribute	Purpose within 360X	Requirement (Source of requirement)	Corresponding HL7 Field/Component/Subcomponent
author	If supplied, MUST indicate the clinician who is providing the referral outcome.	R2 (XDR and XDM for Direct Messaging)	
classCode	Identifies the specific document type, in this case an HL7 V2 Order Status Update.	R (360X) (R2 XDR and XDM for Direct Messaging)	Message Type in MSH-9.1 value: OSU name: Order status update message coding system: 2.16.840.1.113883.18.30
confidentialityCode	Identifies the confidentiality defined for the order. Implementations SHOULD NOT use codes that reveal the specific trigger causes of confidentiality (e.g., ETH, HIV, PSY, SDV)	R2 (XDR and XDM for Direct Messaging)	Confidentiality Code in ORC-28 Implementations SHOULD constrain to values that do not reflect the cause of confidentiality such as: V Very restricted R Restricted U Usual control

 Copyright © 2021: IHE International, Inc.

Attribute	Purpose within 360X	Requirement (Source of requirement)	Corresponding HL7 Field/Component/Subcomponent
creationTime	Defines the creation time of the order message (as opposed to the order itself)	R2 (XDR and XDM for Direct Messaging)	Date/Time of Message in MSH-7. In the metadata the timestamp shall be in UTC time.
entryUUID	The identifier used for referencing the Document Entry object within the metadata	R (XDR and XDM for Direct Messaging)	N/A
formatCode	The specific format for the message	R (360X)	Based on MSH-9 urn:ihe:pcc:360x:hl7:OSU:O51:2017
hash	SHA-1 hash of the content	R (XDM)	N/A
healthcareFacilityTypeCode	See also practice setting type. This code represents the type of organizational setting which accepted the referral request.	R2 (XDR and XDM for Direct Messaging)	May be derived from / mapped to the information in ORC-21 through 24
languageCode	Specifies the language of the document (order / referral request)	R2 (XDR and XDM for Direct Messaging)	Principal Language of Message in MSH-19
mimeType	The MIME type of the message, indicating that it is plain text (ASCII or utf-8), formatted according to the HL7 V2 rules.	R	x-application/hl7-v2+er7
patientId	The patient ID known to the Referral Initiator. This is either the value of the patientId attribute from the Referral Request, or the value of the sourcePatientId attribute. This value must be the same for the Submission Set, and the other Document entries See PCC TF-1: X.1.3.1	R (360X)	PID-3
practiceSettingCode	Identifies the setting that created the order at a high granularity e.g., Cardiology, FamilyPractice. Should not create ambiguity as compared to healthcareFacilityTypeCode.	R2 (XDR and XDM for Direct)	
size	Size in bytes of the message as it exists in the file system when the contents of the ZIP package are extracted	R (XDM)	N/A

 Copyright © 2021: IHE International, Inc.

Attribute	Purpose within 360X	Requirement (Source of requirement)	Corresponding HL7 Field/Component/Subcomponent
sourcePatientId	The sourcePatientId is the ID as known by the Referral Recipient. Adding this attribute is useful for enabling future unrelated communications about this patient between the Initiator and Recipient. See PCC TF-1: X.1.3.1	R2 (360X)	PID-3
sourcePatientInfo	Demographics information for the patient for whom the referral is made. Adding this attribute is useful for enabling future unrelated communications about this patient between the Initiator and Recipient.	R2 (XDM)	The values from PID-5 (Patient Name), PID-7 (Patient DOB), PID-8 (Patient Sex), and PID-11 (Patient Address) should be used.
typeCode	Further refines classCode – in this case defines the specific HL7 V2 message structure, for this message it is OSU_O51	R (360X)	MSH-9.3 value: OSU_O51 name: Order status update message structure coding system: 2.16.840.1.113883.18.214
uniqueId	Globally unique identifier assigned to the document by its creator.	R	N/A May be based on Message Control ID in MSH-10
URI	The file name in the ZIP file structure containing the order message	R (XDM)	N/A
referenceIdList	Contains the referral ID See PCC TF-1: X.1.3.1	R (360X)	Derived from ORC-2 (Placer Order Number).
objectType	The object type distinguishes between stable and dynamic documents. Only stable documents are used in XDM, and therefore in 360X	R	N/A fixed to urn:uuid:7edca82f-054d-47f2-a032-9b2a5b5186c1

1115

3.57.4.1.2.1.3 Document Entry for Clinical Documentation

The table contains all required (R) Document Entry attributes, as well as any "required if known" (R2) or optional (O) attributes, where 360X imposes a specific constraint or connection to the content of the Document Entry.

1120 The corresponding source information from the CDA Header for each metadata attribute is already described in PCC TF-2:4.1.1, XDSDocumentEntry Metadata.

Note: The Document Entry metadata is the same as in Section 3.55.4.1.2.1.3, Table 3.55.4-3, with the exception of formatCode, which is specific to this message.

 Copyright © 2021: IHE International, Inc.

Table 3.57.4-3: 360X Document Entry Attributes for Clinical Documentation

Attribute	Purpose within 360X	Requirement (Source of requirement)	Corresponding HL7 Field/Component/Subcomponent
author	If supplied, MUST match the author of the CDA	R2 (XDR and XDM for Direct Messaging)	/ClinicalDocument/author
classCode	Identifies the specific document code, as specified in the CDA document	R (360X) (R2 XDR and XDM for Direct Messaging)	The same as /ClinicalDocument/code/@code
confidentialityCode	Identifies the confidentiality defined for the order. Implementations SHOULD NOT use codes that reveal the specific trigger causes of confidentiality (e.g., ETH, HIV, PSY, SDV)	R2 (XDR and XDM for Direct Messaging)	/ClinicalDocument/confidentialityCode/@code Implementations SHOULD constrain to values that do not reflect the cause of confidentiality such as: V Very restricted R Restricted U Usual control
creationTime	Defines the creation time of the CDA (as opposed to the order or the submission set)	R2 (XDR and XDM for Direct Messaging)	/ClinicalDocument/effectiveTime Date/Time of the CCDA. In the metadata, the timestamp shall be in UTC.
entryUUID	The identifier used for referencing the Document Entry object within the metadata	R (XDR and XDM for Direct Messaging)	N/A
formatCode	The specific format of the message	R (360X)	The format code defined for the specific CDA document template: urn:ihe:pcc:xphr:2007 or urn:hl7-org:sdwg:ccda-structuredBody:2.1
hash	SHA-1 hash of the content	R (XDM)	N/A
healthcareFacilityTypeCode	See also practice setting type. This code represents the type of organizational setting of the clinical encounter documented in the CCDA. Note that in context of 360X, this is the facility type of the Referral Request Initiator.	R2 (XDR and XDM for Direct Messaging)	Must be consistent with /ClinicalDocument/author
languageCode	Specifies the language of the document (order / referral request)	R2 (XDR and XDM for Direct Messaging)	/ClinicalDocument/languageCode
mimeType	The MIME type of the document	R	text/xml

 Copyright © 2021: IHE International, Inc.

Attribute	Purpose within 360X	Requirement (Source of requirement)	Corresponding HL7 Field/Component/Subcomponent
patientId	The patient ID known to the Referral Initiator. This is either the value of the patientId attribute from the Referral Request, or the value of the sourcePatientId attribute. This value must be the same for the Submission Set, and the other Document entries See PCC TF-1: X.1.3.1	R (360X) (R2 XDR and XDM for Direct Messaging)	This identifier may be present in /ClinicalDocument/recordTarget/ patientRole/id
practiceSettingCode	Identifies the setting that created the document at a high granularity e.g., Cardiology, Family Practice. Should not create ambiguity as compared to healthcareFacilityTypeCode.	R2 (XDR and XDM for Direct)	N/A
size	Size in bytes of the message as it exists in the file system when the contents of the ZIP package are extracted	R (XDM)	N/A
sourcePatientId	The sourcePatientID is the ID as known by the Referral Recipient. Adding this attribute is useful for enabling future unrelated communications about this patient between the Initiator and Recipient. See PCC TF-1: X.1.3.1	R2 (360X)	The patient ID may be present in /ClinicalDocument/recordTarget/ patientRole/id
sourcePatientInfo	Demographics information for the patient for whom the referral is made. Adding this attribute is useful for enabling future unrelated communications about this patient between the Initiator and Recipient.	R2 (360X)	The information corresponding to the fields PID-5 (Patient Name), PID-7 (Patient DOB), PID-8 (Patient Sex), and PID-11 (Patient Address) can be found in /ClinicalDocument/recordTarget/ patientRole
typeCode	Further refines classCode – in this case defines the specific HL7 V2 message event type, for this message it is O19	R (360X)	/ClinicalDocument/code/
uniqueId	Globally unique identifier assigned to the document by its creator.	R	/ClinicalDocument/id
URI	The file name in the ZIP file structure containing the order message	R (XDM)	N/A
referenceIdList	Contains the referral ID See PCC TF-1: X.1.3.1	R (360X)	

 Copyright © 2021: IHE International, Inc.

Attribute	Purpose within 360X	Requirement (Source of requirement)	Corresponding HL7 Field/Component/Subcomponent
objectType	The object type distinguishes between stable and dynamic documents. Only stable documents are used in XDM, and therefore in 360X	R	N/A fixed to urn:uuid:7edca82f-054d-47f2-a032-9b2a5b5186c1

3.57.4.1.2.2 Message Content – Referral Status Update

The status update of the Referral Outcome message is an HL7 Version 2 OSU^O51^OMG_O51 message. The complete message definition can be found in the 360X HL7 V2 Message Payload Definition (chapters 3 to 5).

A table containing only the required segments and fields can be found as part of the 360X project implementation Guide at https://oncprojectracking.healthit.gov/wiki/display/TechLab360X/360X+Implementation+Guide#id-360XImplementationGuide-6.3.3MessageOSU^O51^OSU_O51.

The following fields are further defined for the purpose of the Referral Outcome:

Table 3.57.4-4: 360X Status Update Fields

Data element	Message Field	Format and use
Order Control Code	ORC-1	The value of SC SHALL be used for the Referral Outcome
Referral ID	ORC-2	<referral ID>^^<assigning authority OID>^ISO
Order status	ORC-5	The value of CM SHALL be used for the Referral Outcome
Ordering provider	ORC-12	The referring provider SHALL NOT be echoed back in the status update message. This field must be empty.

3.57.4.1.2.3 Message Content – Clinical Information

The clinical information for the referral outcome is conveyed via a CDA document. For each 360X content option, the following CDA document templates are specified for use in a referral request.

3.57.4.1.2.3.1 XPHR Option

The Referral Recipient who claims support for this option shall include a XPHR document in the Referral Request package. The structure and content for the XPHR document template (template ID 1.3.6.1.4.1.19376.1.5.3.1.1.5) are defined in PCC TF-2: 6.3.1.5.

The Referral Initiator who claims support for this option shall be able to receive, store and allow users to access the contents of the XPHR document.

 Copyright © 2021: IHE International, Inc.

3.57.4.1.2.3.2 Consolidated CDA (C-CDA) Option

The HL7 Implementation Guide for CDA Release 2: Consolidated CDA Templates for Clinical Notes (US Realm) DSTU Release 2.1 has multiple document templates defined. The following table shows the available document types, and their use as payload for transactions [PCC-57] and [PCC-59]. RC means recommended, O means optional, and N/A (Not Applicable) means that the particular document type is not to be used in these transactions.

Table 3.57.4-5: 360X US National Extension Document Content Modules

Document Content Modules	Template ID (/ClinicalDocument/templateid)	Use	Reference
Care Plan	@root: 2.16.840.1.113883.10.20.22.1.15 @extension: 2015-08-01	O	C-CDA Section 1.1.2
Consultation Note	@root: 2.16.840.1.113883.10.20.22.1.4 @extension: 2015-08-01	RC	C-CDA Section 1.1.3
Continuity of Care Document (CCD)	@root: 2.16.840.1.113883.10.20.22.1.2 @extension: 2015-08-01	RC	C-CDA Section 1.1.5
Diagnostic Imaging Report	@root: 2.16.840.1.113883.10.20.22.1.5 @extension: 2014-06-09	O	C-CDA Section 1.1.7
Discharge Summary	@root: 2.16.840.1.113883.10.20.22.1.8 @extension: 2015-08-01	O	C-CDA Section 1.1.9
History and Physical	@root: 2.16.840.1.113883.10.20.22.1.3 @extension: 2015-08-01	O	C-CDA Section 1.1.11
Operative Note	@root: 2.16.840.1.113883.10.20.22.1.7 @extension: 2015-08-01	O	C-CDA Section 1.1.13
Procedure Note	@root: 2.16.840.1.113883.10.20.22.1.6 @extension: 2015-08-01	O	C-CDA Section 1.1.15
Progress Note	@root: 2.16.840.1.113883.10.20.22.1.9 @extension: 2015-08-01	O	C-CDA Section 1.1.17
Referral Note	@root: 2.16.840.1.113883.10.20.22.1.14 @extension: 2015-08-01	N/A	C-CDA Section 1.1.19
Transfer Summary	@root: 2.16.840.1.113883.10.20.22.1.13 @extension: 2015-08-01	N/A	C-CDA Section 1.1.20
Unstructured Document	@root: 2.16.840.1.113883.10.20.22.1.10 @extension: 2015-08-01	N/A	C-CDA Section 1.1.21

The Referral Initiator who claims support for this option shall be able to receive, store and allow users to access the contents of any of the recommended (RC) or Optional (O) documents from this table.

 Copyright © 2021: IHE International, Inc.

The Consultation Note document template is recommended, as it is the most general-purpose template for interim consultation notes and referral outcome. It requires the use of the inFulfillmentOf element in the document header.

The Continuity of Care Document (CCD) template is recommended as it is the most widespread implemented document type. When used as part of the [PCC-57] or [PCC-59] transaction, the CCD SHOULD contain the inFulfillmentOf header element.

The document templates in this list provide a hierarchy of implementation choices for the Content Creator:

- If possible, create a Consultation Note
- If already able to create CCDs, use the CCD template with the addition of the inFulfillmentOf element in the document header
- If already able to create CCDs without the capability for optional header elements, use the CCD as is
- If any other document template, marked as O (optional) in the table above is more applicable to a specific referral workflow, use that document template, and use the inFulfillmentOf element in the document header if possible.

When the inFulfillmentOf header element is present, the /ClinicalDocument/inFulfillmentOf/order/id element SHALL contain the same referral ID as the one present in the metadata, and in the HL7 V2 message payload of the transaction.

3.57.4.1.3 Expected Actions

The message indicates that the referral is complete. Upon receiving the message, the Referral Initiator's system is expected to extract the payload, and provide the appropriate information about the outcome to the appropriate users. Particular attention should be paid to cases, which provide an indication that a serious condition was found with the patient for whom the referral was made. Such indications can be described via specific diagnosis codes, abnormal findings or results, etc.

If the outcome of the referral is a new or updated care plan for the patient, where ongoing care may be provided by both the Referral Initiator and the Referral Recipient, the corresponding system should assist users with the appropriate information and in facilitating future communications.

3.57.5 Security Considerations

The security requirements for the XDM Profile, and the "ZIP over Email" and "Zip over Email Response" Options apply to this transaction.

3.57.5.1 Security Audit Considerations

NA

 Copyright © 2021: IHE International, Inc.

Add Section 3.58

3.58 Referral Cancellation [PCC-58]

3.58.1 Scope

This transaction is used to request a cancelation of the referral. It is directed from the Referral Initiator to the Referral Recipient.

3.58.2 Actor Roles

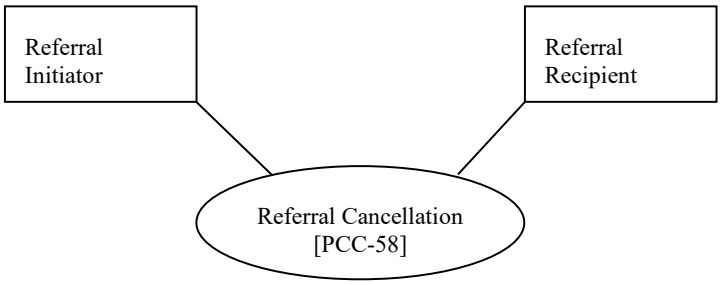

Figure 3.58.2-1: Use Case Diagram

Table 3.58.2-1: Actor Roles

Actor:	Referral Initiator
Role:	The provider who ordered the referral
Actor:	Referral Recipient
Role:	The provider who is acting on the referral

3.58.3 Referenced Standards

HL7 Messaging standard, version 2.5.1 Chapters 2, 4

HL7 Messaging standard, version 2.9 Chapter 4

3.58.4 Messages

 Copyright © 2021: IHE International, Inc.

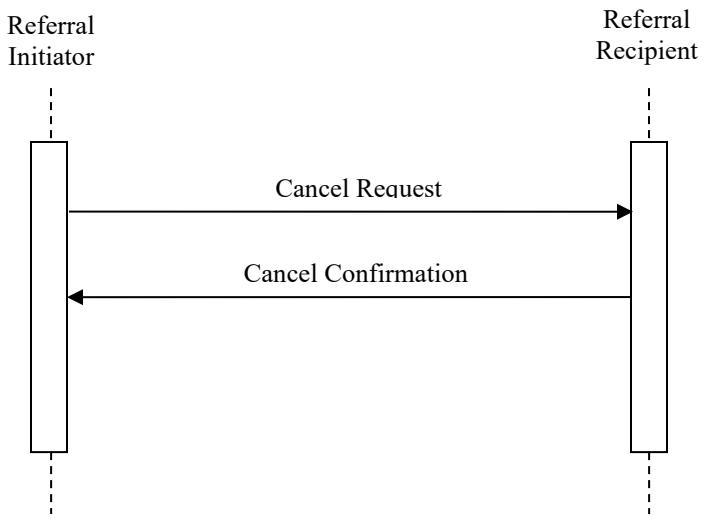

Figure 3.58.4-1: Interaction Diagram

3.58.4.1 Cancel Request Message

The Cancel Request message is used to convey the intent of the Referral Initiator to stop the referral process.

3.58.4.1.1 Trigger Events

The Cancel Request message is sent from the Referral Initiator to the Referral Recipient in the cases when for some reason the Referral Initiator determines that the referral is no longer necessary. It can be sent at any time after the initial Referral Request Package had been sent.

3.58.4.1.2 Message Semantics

This message is an XDM package constructed following the rules described in the XDM Profile, transaction [ITI-32], ITI TF-2: 3.32. The current transaction, [PCC-58], adds the following constraints:

- Only a single submission set shall be present in the XDM package (ITI TF-2: 3.32.4.1.2)
- Only “simple part” documents shall be allowed in the XDM package (ITI TF-2: 3.32.4.1.2.2).

The Cancel Request XDM package contains a single HL7 V2 OSU^O51^OSU_O51 message.

 Copyright © 2021: IHE International, Inc.

1225 #### 3.58.4.1.2.1 Message Content – Metadata

The metadata in the XDM package is constrained for the purposes of Closed Loop Referral as described in the following sections for Submission Set and Document Entries.

3.58.4.1.2.1.1 Submission Set

The table contains all required (R) Submission Set attributes, as well as any "required if known"
1230 (R2) or optional (O) attributes, where 360X imposes a specific constraint or connection to the content of a Document Entry.

Note: The Submission Set metadata is identical to the metadata described in Section 3.55.4.1.2.1.1, Table 3.55.4-1. It is provided here for completeness and to make the reading of the specification easier.

1235 **Table 3.58.4-1: 360X Submission Set Attributes**

Attribute	Purpose within 360X	Requirement (Source of requirement)	Value and Source
author	The entity which created the submission set, including the Referral Initiator's Direct address.	R (XDR and XDM for Direct Messaging)	The Direct address of the Referral Initiator is placed in the authorTelecommunication slot of the author classification.
contentTypeCode	Defines the submission set as part of a referral.	R (360X)	LOINC Code 57133-1 is used to indicate that this Submission Set is part of a referral.
entryUUID	The identifier used for referencing the Submission Set object within the metadata.	R (IHE)	Assigned by the Referral Initiator when the Submission Set was created.
intendedRecipient	The entity for which the Submission set is intended.	R (XDR and XDM for Direct Messaging)	The Direct address of the Referral Recipient.
patientId	The patient ID known to the Referral Recipient. How the Referral Initiator obtains this information is out of scope for this transaction. For example, if the Referral Recipient has already accepted the referral request, this value could be obtained from the sourcePatientId of the Document Entry of the Referral Accept message. This value, if present, must be the same for the Submission Set, and the Document Entries within it.	R2 (XDR and XDM for Direct Messaging)	See PCC TF-1: X.1.3.1 for description on how patient identity is conveyed between the Referral Initiator and the Referral Recipient.

 Copyright © 2021: IHE International, Inc.

Attribute	Purpose within 360X	Requirement (Source of requirement)	Value and Source
sourceId	Globally unique identifier representing the entity which created the submission set. Usually an organizational identifier.	R (IHE)	An OID.
submissionTime	Represents the point in time at the creating entity when the SubmissionSet was created.	R (IHE)	Timestamp in UTC
uniqueId	Globally unique identifier assigned to the submission set by its creator.	R	An OID.
referenceIdList	The referenceIdList contains the referral ID, as described in PCC TF-1: X.1.3.1.	R (360X)	This attribute is currently only defined by IHE for the Document Entry metadata. Since it is a Slot; however, it is not prohibited from being added to the Submission Set metadata.

3.58.4.1.2.1.2 Document Entry for Referral Status Update

The table contains all required (R) Document Entry attributes, as well as any "required if known" (R2) or optional (O) attributes from the XD* Metadata specification, where 360X imposes a specific constraint or connection to the content of the Document Entry.

Table 3.58.4-2: 360X Document Entry Attributes for Status Update

Attribute	Purpose within 360X	Requirement (Source of requirement)	Corresponding HL7 Field/Component/Subcomponent
author	If supplied, SHALL indicate the person who is requesting the cancellation.	R2 (XDR and XDM for Direct Messaging)	
classCode	Identifies the specific document type, in this case an HL7 V2 Order Status Update.	R (360X) (R2 XDR and XDM for Direct Messaging)	Message Type in MSH-9.1 value: OSU name: Order status update message coding system: 2.16.840.1.113883.18.30

 Copyright © 2021: IHE International, Inc.

Attribute	Purpose within 360X	Requirement (Source of requirement)	Corresponding HL7 Field/Component/Subcomponent
confidentialityCode	Identifies the confidentiality defined for the order. Implementations SHOULD NOT use codes that reveal the specific trigger causes of confidentiality (e.g., ETH, HIV, PSY, SDV).	R2 (XDR and XDM for Direct Messaging)	Confidentiality Code in ORC-28. Implementations SHOULD constrain to values that do not reflect the cause of confidentiality such as: V Very restricted R Restricted U Usual control
creationTime	Defines the creation time of the order message (as opposed to the order itself).	R2 (XDR and XDM for Direct Messaging)	Date/Time of Message in MSH-7. In the metadata the timestamp SHALL be in UTC time.
entryUUID	The identifier used for referencing the Document Entry object within the metadata.	R (XDR and XDM for Direct Messaging)	N/A
formatCode	The specific format for the message.	R (360X)	Based on MSH-9.1 and MSH-9.2 value: urn:ihe:pcc:360x:hl7:OSU:O51:2017 name: Order status update coding system: 1.3.6.1.4.1.19376.1.2.3
hash	SHA-1 hash of the content	R (XDM)	N/A
healthcareFacilityTypeCode	See also practice setting type. This code represents the type of organizational setting which accepted the referral request.	R2 (XDR and XDM for Direct Messaging)	May be derived from / mapped to the information in ORC-21 through 24.
languageCode	Specifies the language of the document (order / referral request).	R2 (XDR and XDM for Direct Messaging)	Principal Language of Message in MSH-19.
mimeType	The MIME type of the message, indicating that it is plain text (ASCII or utf-8), formatted according to the HL7 V2 rules.	R	x-application/hl7-v2+er7

 Copyright © 2021: IHE International, Inc.

Attribute	Purpose within 360X	Requirement (Source of requirement)	Corresponding HL7 Field/Component/Subcomponent
patientId	The patient ID known to the Referral Recipient. How the Referral Initiator obtains this information is out of scope for this transaction. For example, if the Referral Recipient has already accepted the referral request, this value could be obtained from the sourcePatientId of the Document Entry of the Referral Accept message. This value, if present, must be the same for the Submission Set, and the other Document entries See PCC TF-1: X.1.3.1.	R2 (XDM)	PID-3
practiceSettingCode	Identifies the setting that created the order at a high granularity e.g., Cardiology, FamilyPractice. Should not create ambiguity as compared to healthcareFacilityTypeCode.	R2 (XDR and XDM for Direct)	
size	Size in bytes of the message as it exists in the file system when the contents of the ZIP package are extracted.	R (XDM)	N/A
sourcePatientId	The sourcePatientID is the ID as known by the Referral Initiator. See PCC TF-1: X.1.3.1.	R (360X)	PID-3
sourcePatientInfo	Demographics information for the patient for whom the referral is made. The demographics information should be used by the Referral Recipient for patient identity matching and verification.	R2 (XDM)	The values from PID-5 (Patient Name), PID-7 (Patient DOB), PID-8 (Patient Sex), and PID-11 (Patient Address) should be used.
typeCode	Further refines classCode – in this case defines the specific HL7 V2 message structure, for this message it is OSU_O51.	R (360X)	MSH-9.3 value: OSU_O51 name: Order status update message structure coding system: 2.16.840.1.113883.18.214
uniqueId	Globally unique identifier assigned to the document by its creator.	R	N/A May be based on Message Control ID in MSH-10
URI	The file name in the ZIP file structure containing the order message.	R (XDM)	N/A

 Copyright © 2021: IHE International, Inc.

Attribute	Purpose within 360X	Requirement (Source of requirement)	Corresponding HL7 Field/Component/Subcomponent
referenceIdList	Contains the referral ID See PCC TF-1: X.1.3.1.	R (360X)	Derived from ORC-2 (Placer Order Number).
objectType	The object type distinguishes between stable and dynamic documents. Only stable documents are used in XDM, and therefore in 360X.	R	N/A fixed to urn:uuid:7edca82f-054d-47f2-a032-9b2a5b5186c1

3.58.4.1.2.2 Message Content – Referral Status Update

The content of the Cancel Request message is an HL7 Version 2 OSU^O51^OMG_O51 message. The complete message definition can be found in the 360X HL7 V2 Message Payload Definition (chapters 3 to 5).

A table containing only the required segments and fields can be found as part of the 360X Project Implementation Guide at https://oncprojectracking.healthit.gov/wiki/display/TechLab360X/360X+Implementation+Guide#id-360XImplementationGuide-6.3.3MessageOSU^O51^OSU_O51.

The following fields are specific to the Cancel Request:

Table 3.58.4-3: 360X Status Update Fields

Data element	Message Field	Format and use
Order Control Code	ORC-1	The value of CA SHALL be used for the Cancel Request
Referral ID	ORC-2	<referral ID>^^<assigning authority OID>^ISO
Order status	ORC-5	The value of CA SHALL be used for the Cancel Request
Ordering provider	ORC-12	The provider who ordered the referral. Note that someone else could be canceling the order, if they have that authority.
Reason for cancel	ORC-16	This field is used to indicate the reason for the cancel request. At a minimum, a free text reason SHOULD be supplied in ORC-16.2.

3.58.4.1.3 Expected Actions

The Referral Recipient SHALL be able to receive the Cancel Request at any point of the referral workflow. It is up to the Referral Recipient, based on their policies and regulatory requirements, to determine if the Cancel Request can be satisfied, in which case a Cancel Confirmation shall be sent. There are cases, however, where the Cancel Request cannot be satisfied, and the Referral Recipient may continue with the next step of the workflow.

The Referral Initiator SHALL wait for either a Cancel Confirmation, or another message from the Referral Recipient before considering the referral as not being active. If a Cancel

 Copyright © 2021: IHE International, Inc.

Confirmation is not received, the Referral Initiator may need to use other methods of communications to resolve the status of the referral, which is out of scope for this transaction.

3.58.4.2 Cancel Confirmation

The Cancel Confirmation message conveys the compliance by the Referral Recipient with the Cancel Request received from the Referral Initiator.

3.58.4.2.1 Trigger Events

When a Cancel Request message is received by the Referral Recipient, and the request can be satisfied, the Referral Recipient will trigger the Cancel Confirmation message.

3.58.4.2.2 Message Semantics

This message is an XDM package constructed following the rules described in the XDM Profile, transaction [ITI-32], ITI TF-2: 3.32. The current transaction, [PCC-58], adds the following constraints:

- Only a single submission set shall be present in the XDM package (ITI TF-2: 3.32.4.1.2)
- Only "simple part" documents shall be allowed in the XDM package (ITI TF-2: 3.32.4.1.2.2).

The Cancel Confirmation XDM package contains a single HL7 V2 OSU^O51^OSU_O51 message.

3.58.4.2.2.1 Message Content – Metadata

3.58.4.2.2.1.1 Submission Set

The table contains all required (R) Submission Set attributes, as well as any "required if known" (R2) or optional (O) attributes, where 360X imposes a specific constraint or connection to the content of a Document Entry.

Note: The Submission Set metadata is identical to the metadata described in Section 3.55.4.2.2.1.1, Table 3.55.4-6. It is provided here for completeness and to make the reading of the specification easier.

Table 3.58.4-4: 360X Submission Set Attributes

Attribute	Purpose within 360X	Requirement (Source of requirement)	Value and Source
author	The entity which created the submission set, including the Referral Recipient's Direct address.	R (XDR and XDM for Direct Messaging)	The Direct address of the Referral Recipient is placed in the authorTelecommunication slot of the author classification.

 Copyright © 2021: IHE International, Inc.

Attribute	Purpose within 360X	Requirement (Source of requirement)	Value and Source
contentTypeCode	Defines the submission set as part of a referral.	R (360X)	LOINC Code 57133-1 is used to indicate that this Submission Set is part of a referral.
entryUUID	The identifier used for referencing the Submission Set object within the metadata.	R (IHE)	Assigned by the Referral Recipient when the Submission Set was created.
intendedRecipient	The entity for which the Submission set is intended.	R (XDR and XDM for Direct Messaging)	The Direct address of the Referral Initiator.
patientId	The patient ID known to the Referral Initiator. This is either the value of the patientId attribute from the Referral Request, or the value of the sourcePatientId attribute. This value must be the same for the Submission Set, and the Document Entries within it.	R (360X)	See PCC TF-1: X.1.3.1 for description on how patient identity is conveyed between the Referral Initiator and the Referral Recipient.
sourceId	Globally unique identifier representing the entity which created the submission set. Usually an organizational identifier.	R (IHE)	An OID.
submissionTime	Represents the point in time at the creating entity when the SubmissionSet was created.	R (IHE)	Timestamp in UTC
uniqueId	Globally unique identifier assigned to the submission set by its creator.	R	An OID.
referenceIdList	The referenceIdList contains the referral ID, as described in PCC TF-1: X.1.3.1.	R (360X)	This attribute is currently only defined by IHE for the Document Entry metadata. Since it is a Slot, however, it is not prohibited from being added to the Submission Set metadata.

3.58.4.2.2.1.2 Document Entry for Referral Status Update

The table contains all required (R) Document Entry attributes, as well as any “required if known” (R2) or optional (O) attributes, where 360X imposes a specific constraint or connection to the content of the Document Entry.

Note: The Document Entry metadata is identical to the metadata described in Section 3.55.4.2.2.1.2, with the exception of the author attribute. It is provided here for completeness and to make the reading of the specification easier.

 Copyright © 2021: IHE International, Inc.

Table 3.58.4-5: 360X Document Entry Attributes for Status Update

Attribute	Purpose within 360X	Requirement (Source of requirement)	Corresponding HL7 Field/Component/Subcomponent
author	If supplied, MUST indicate the user who confirmed the cancellation.	R2 (XDR and XDM for Direct Messaging)	
classCode	Identifies the specific document type, in this case an HL7 V2 Order Status Update.	R (360X) (R2 XDR and XDM for Direct Messaging)	Message Type in MSH-9.1 value: OSU name: Order status update message coding system: 2.16.840.1.113883.18.30
confidentialityCode	Identifies the confidentiality defined for the order. Implementations SHOULD NOT use codes that reveal the specific trigger causes of confidentiality (e.g., ETH, HIV, PSY, SDV)	R2 (XDR and XDM for Direct Messaging)	Confidentiality Code in ORC-28 Implementations SHOULD constrain to values that do not reflect the cause of confidentiality such as: V Very restricted R Restricted U Usual control
creationTime	Defines the creation time of the order message (as opposed to the order itself).	R2 (XDR and XDM for Direct Messaging)	Date/Time of Message in MSH-7. In the metadata the timestamp shall be in UTC time.
entryUUID	The identifier used for referencing the Document Entry object within the metadata.	R (XDR and XDM for Direct Messaging)	N/A
formatCode	The specific format for the message.	R (360X)	Based on MSH-9.1 and MSH-9.2 value: urn:ihe:pcc:360x:hl7:OSU:O51:2017 name: Order status update coding system: 1.3.6.1.4.1.19376.1.2.3
hash	SHA-1 hash of the content.	R (XDM)	N/A
healthcareFacilityTypeCode	See also practice setting type. This code represents the type of organizational setting which accepted the referral request.	R2 (XDR and XDM for Direct Messaging)	May be derived from / mapped to the information in ORC-21 through 24
languageCode	Specifies the language of the document (order / referral request).	R2 (XDR and XDM for Direct Messaging)	Principal Language of Message in MSH-19
mimeType	The MIME type of the message, indicating that it is plain text (ASCII or utf-8), formatted according to the HL7 V2 rules.	R	x-application/hl7-v2+er7

 Copyright © 2021: IHE International, Inc.

Attribute	Purpose within 360X	Requirement (Source of requirement)	Corresponding HL7 Field/Component/Subcomponent
patientId	The patient ID known to the Referral Initiator. This is either the value of the patientId attribute from the Referral Request, or the value of the sourcePatientId attribute. This value must be the same for the Submission Set, and the other Document entries See PCC TF-1: X.1.3.1.	R (360X)	PID-3
practiceSettingCode	Identifies the setting that created the order at a high granularity e.g., Cardiology, FamilyPractice. Should not create ambiguity as compared to healthcareFacilityTypeCode.	R2 (XDR and XDM for Direct)	
size	Size in bytes of the message as it exists in the file system when the contents of ZIP package are extracted.	R (XDM)	N/A
sourcePatientId	The sourcePatientID is the ID as known by the Referral Recipient. Adding this attribute is useful for enabling future unrelated communications about this patient between the Initiator and Recipient. See PCC TF-1: X.1.3.1.	R2 (360X)	PID-3
sourcePatientInfo	Demographics information for the patient for whom the referral is made. Adding this attribute is useful for enabling future unrelated communications about this patient between the Initiator and Recipient.	R2 (XDM)	The values from PID-5 (Patient Name), PID-7 (Patient DOB), PID-8 (Patient Sex), and PID-11 (Patient Address) should be used.
typeCode	Further refines classCode – in this case defines the specific HL7 V2 message structure, for this message it is OSU_O51.	R (360X)	MSH-9.3 value: OSU_O51 name: Order status update message structure coding system: 2.16.840.1.113883.18.214
uniqueId	Globally unique identifier assigned to the document by its creator.	R	N/A May be based on Message Control ID in MSH-10
URI	The file name in the ZIP file structure containing the order message.	R (XDM)	N/A
referenceIdList	Contains the referral ID See PCC TF-1: X.1.3.1.	R (360X)	Derived from ORC-2 (Placer Order Number).

 Copyright © 2021: IHE International, Inc.

Attribute	Purpose within 360X	Requirement (Source of requirement)	Corresponding HL7 Field/Component/Subcomponent
objectType	The object type distinguishes between stable and dynamic documents. Only stable documents are used in XDM, and therefore in 360X.	R	N/A fixed to urn:uuid:7edca82f-054d-47f2-a032-9b2a5b5186c1

3.58.4.2.2.2 Message Content – Referral Status Update

The content of the Cancel Confirmation message is an HL7 Version 2 OSU^O51^OMG_O51 message. The complete message definition can be found in the 360X HL7 V2 Message Payload Definition (chapters 3 to 5).

A table containing only the required segments and fields can be found as part of the 360X Project implementation Guide at https://oncprojectracking.healthit.gov/wiki/display/TechLab360X/360X+Implementation+Guide#id-360XImplementationGuide-6.3.3MessageOSU^O51^OSU_O51.

The following fields are specific to the Referral Request:

Table 3.58.4-6: 360X Status Update Fields

Data element	Message Field	Format and use
Order Control Code	ORC-1	The value of CR SHALL be used for the Cancel Confirmation.
Referral ID	ORC-2	<referral ID>^^<assigning authority OID>^ISO.
Order status	ORC-5	The value of CA SHALL be used for the Cancel Request.
Ordering provider	ORC-12	The referring provider SHALL NOT be echoed back in the status update message. This field must be empty.

3.58.4.2.3 Expected Actions

A Referral Cancel Confirmation message is sent by the Referral Recipient as a response to the Referral Cancel Request message. Note that there are cases where the referral is at a state where the cancellation request cannot be accepted by the Referral Recipient. In such cases, the Referral Recipient Shall send a Referral Outcome message, which will contain the relevant clinical information up to the point of the Cancellation Request.

When a Referral Cancel Confirmation message is received by the Referral Initiator, this signifies the end of the referral. The information about the cancellation shall be recorded and presented to appropriate users.

 Copyright © 2021: IHE International, Inc.

3.58.5 Security Considerations

The security requirements for the XDM Profile, and the "ZIP over Email" and "Zip over Email Response" Options apply to this transaction.

3.58.5.1 Security Audit Considerations

NA

 Copyright © 2021: IHE International, Inc.

Add Section 3.59

3.59 Interim Consultation Note [PCC-59]

3.59.1 Scope

This transaction is used to convey intermittent or preliminary findings as a result of the consultation requested by the Referral Request. The referral is still considered in process, until the Referral Outcome [PCC-57] is successfully sent.

3.59.2 Actor Roles

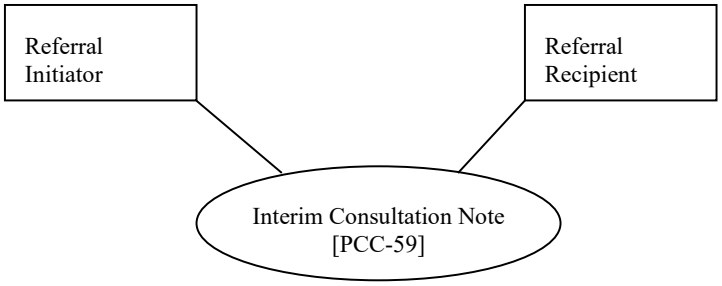

Figure 3.59.2-1: Use Case Diagram

Table 3.59.2-1: Actor Roles

Actor:	Referral Initiator
Role:	The provider who ordered the referral
Actor:	Referral Recipient
Role:	The provider who is acting on the referral

3.59.3 Referenced Standards

HL7 Messaging standard, version 2.5.1 Chapters 2, 4

HL7 Messaging standard, version 2.9 Chapter 4

HL7 Implementation Guide for CDA Release 2: Consolidated CDA Templates for Clinical Notes (US Realm) DSTU Release 2.1

 Copyright © 2021: IHE International, Inc.

3.59.4 Messages

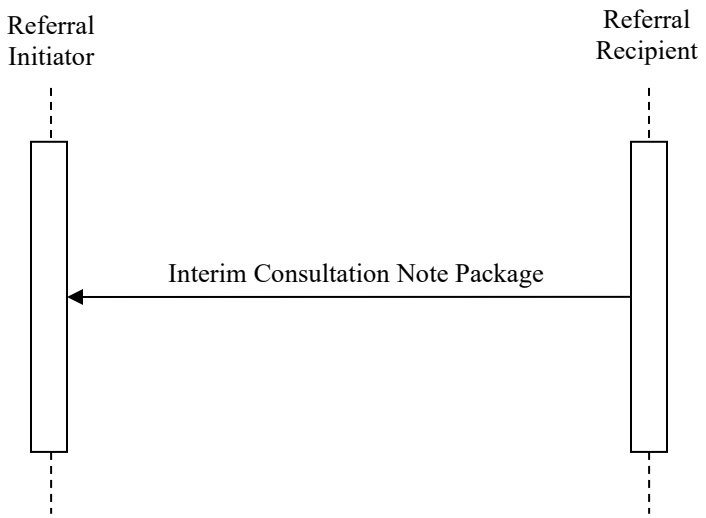

Figure 3.59.4-1: Interaction Diagram

3.59.4.1 Interim Consultation Note Package

The Interim Consultation Note Package conveys some, but not all of the results of the referral services performed by the Referral Recipient. It contains both the indication that the referral is in progress, and the clinical information presented in a clinical document.

3.59.4.1.1 Trigger Events

There are two common cases when the Interim Consultation Note is sent. One case is when a referral is for a certain number of service units (e.g., visits), and before the referral is completed, the Referral Recipient needs to send clinical information on the progress of the care provided to the patient.

The other case is when the requested service is performed, but the complete outcome of the referral may take a period of time to accomplish. In that case, the Referral Recipient may send an Interim Consultation Note first, and once all the information is available, send the Referral Outcome.

Note that in both cases the clinical documents sent in this transaction need to stand on their own, and no use is made of the ability to replace or append previous documents which is part of the generic CDA and XD* metadata definitions.

 Copyright © 2021: IHE International, Inc.

3.59.4.1.2 Message Semantics

This message is an XDM package constructed following the rules described in the XDM Profile, transaction [ITI-32], ITI TF-2: 3.32. The current transaction, [PCC-59], adds the following constraints:

- Only a single submission set shall be present in the XDM package (ITI TF-2: 3.32.4.1.2)
- Only "simple part" documents shall be allowed in the XDM package (ITI TF-2: 3.32.4.1.2.2).

The Interim Consultation Note XD* package contains two Document Entries – an HL7 V2 OSU^O51^OSU_O51 message and a CDA clinical document.

3.59.4.1.2.1 Message Content – Metadata

3.59.4.1.2.1.1 Submission Set

The table contains all required (R) Submission Set attributes, as well as any "required if known" (R2) or optional (O) attributes, where 360X imposes a specific constraint or connection to the content of a Document Entry.

Note: The Submission Set metadata is identical to the metadata described in Section 3.55.4.2.2.1.1, Table 3.55.4-6. It is provided here for completeness and to make the reading of the specification easier.

Table 3.59.4-1: 360X Submission Set Attributes

Attribute	Purpose within 360X	Requirement (Source of requirement)	Value and Source
author	The entity which created the submission set, including the Referral Recipient's Direct address.	R (XDR and XDM for Direct Messaging)	The Direct address of the Referral Recipient is placed in the authorTelecommunication slot of the author classification.
contentTypeCode	Defines the submission set as part of a referral.	R (360X)	LOINC Code 57133-1 is used to indicate that this Submission Set is part of a referral.
entryUUID	The identifier used for referencing the Submission Set object within the metadata.	R (IHE)	Assigned by the Referral Recipient when the Submission Set was created.
intendedRecipient	The entity for which the Submission set is intended.	R (XDR and XDM for Direct Messaging)	The Direct address of the Referral Initiator.

 Copyright © 2021: IHE International, Inc.

Attribute	Purpose within 360X	Requirement (Source of requirement)	Value and Source
patientId	The patient ID known to the Referral Initiator. This is either the value of the patientId attribute from the Referral Request, or the value of the sourcePatientId attribute. This value must be the same for the Submission Set, and the Document Entries within it.	R (360X)	See PCC TF-1: X.1.3.1 for description on how patient identity is conveyed between the Referral Initiator and the Referral Recipient.
sourceId	Globally unique identifier representing the entity which created the submission set. Usually an organizational identifier.	R (IHE)	An OID.
submissionTime	Represents the point in time at the creating entity when the SubmissionSet was created.	R (IHE)	Timestamp in UTC
uniqueId	Globally unique identifier assigned to the submission set by its creator.	R	An OID.
referenceIdList	The referenceIdList contains the referral ID, as described in PCC TF-1: X.1.3.1.	R (360X)	This attribute is currently only defined by IHE for the Document Entry metadata. Since it is a Slot, however, it is not prohibited from being added to the Submission Set metadata.

3.59.4.1.2.1.2 Document Entry for Referral Status Update

The table contains all required (R) Document Entry attributes, as well as any "required if known" (R2) or optional (O) attributes, where 360X imposes a specific constraint or connection to the content of the Document Entry.

Note: The Document Entry metadata is identical to the metadata described in Section 3.57.4.1.2.1.2, Table 3.57.4-2. It is provided here for completeness and to make the reading of the specification easier.

Table 3.59.4-2: 360X Document Entry Attributes for Status Update

Attribute	Purpose within 360X	Requirement (Source of requirement)	Corresponding HL7 Field/Component/Subcomponent
author	If supplied, MUST indicate the clinician who has performed the service requested by the referral.	R2 (XDR and XDM for Direct Messaging)	

 Copyright © 2021: IHE International, Inc.

Attribute	Purpose within 360X	Requirement (Source of requirement)	Corresponding HL7 Field/Component/Subcomponent
classCode	Identifies the specific document type, in this case an HL7 V2 Order Status Update.	R (360X) (R2 XDR and XDM for Direct Messaging)	Message Type in MSH-9.1 value: OSU name: Order status update message coding system: 2.16.840.1.113883.18.30
confidentialityCode	Identifies the confidentiality defined for the order. Implementations SHOULD NOT use codes that reveal the specific trigger causes of confidentiality (e.g., ETH, HIV, PSY, SDV).	R2 (XDR and XDM for Direct Messaging)	Confidentiality Code in ORC-28 Implementations SHOULD constrain to values that do not reflect the cause of confidentiality such as: V Very restricted R Restricted U Usual control
creationTime	Defines the creation time of the order message (as opposed to the order itself).	R2 (XDR and XDM for Direct Messaging)	Date/Time of Message in MSH-7. In the metadata the timestamp shall be in UTC time.
entryUUID	The identifier used for referencing the Document Entry object within the metadata.	R (XDR and XDM for Direct Messaging)	N/A
formatCode	The specific format for the message.	R (360X)	Based on MSH-9.1 and MSH-9.2 value: urn:ihe:pcc:360x:hl7:OSU:O51:2017 name: Order status update coding system: 1.3.6.1.4.1.19376.1.2.3
Hash	SHA-1 hash of the content.	R (XDM)	N/A
healthcareFacilityTypeCode	See also practice setting type. This code represents the type of organizational setting which accepted the referral request.	R2 (XDR and XDM for Direct Messaging)	May be derived from / mapped to the information in ORC-21 through 24.
languageCode	Specifies the language of the document (order / referral request).	R2 (XDR and XDM for Direct Messaging)	Principal Language of Message in MSH-19.
mimeType	The MIME type of the message, indicating that it is plain text (ASCII or utf-8), formatted according to the HL7 V2 rules.	R	x-application/hl7-v2+er7

 Copyright © 2021: IHE International, Inc.

Attribute	Purpose within 360X	Requirement (Source of requirement)	Corresponding HL7 Field/Component/Subcomponent
patientId	The patient ID known to the Referral Initiator. This is either the value of the patientId attribute from the Referral Request, or the value of the sourcePatientId attribute. This value must be the same for the Submission Set, and the other Document entries. See PCC TF-1: X.1.3.1	R (360X)	PID-3
practiceSettingCode	Identifies the setting that created the order at a high granularity e.g., Cardiology, FamilyPractice. Should not create ambiguity as compared to healthcareFacilityTypeCode.	R2 (XDR and XDM for Direct)	
size	Size in bytes of the message as it exists in the file system when the contents of the ZIP package are extracted.	R (XDM)	N/A
sourcePatientId	The sourcePatientID is the ID as known by the Referral Recipient. Adding this attribute is useful for enabling future unrelated communications about this patient between the Initiator and Recipient. See PCC TF-1: X.1.3.1.	R2 (360X)	PID-3
sourcePatientInfo	Demographics information for the patient for whom the referral is made. Adding this attribute is useful for enabling future unrelated communications about this patient between the Initiator and Recipient.	R2 (XDM)	The values from PID-5 (Patient Name), PID-7 (Patient DOB), PID-8 (Patient Sex), and PID-11 (Patient Address) should be used.
typeCode	Further refines classCode – in this case defines the specific HL7 V2 message structure, for this message it is OSU_O51.	R (360X)	MSH-9.3 value: OSU_O51 name: Order status update message structure coding system: 2.16.840.1.113883.18.214
uniqueId	Globally unique identifier assigned to the document by its creator.	R	N/A May be based on Message Control ID in MSH-10
URI	The file name in the ZIP file structure containing the order message.	R (XDM)	N/A
referenceIdList	Contains the referral ID. See PCC TF-1: X.1.3.1.	R (360X)	Derived from ORC-2 (Placer Order Number).

 Copyright © 2021: IHE International, Inc.

Attribute	Purpose within 360X	Requirement (Source of requirement)	Corresponding HL7 Field/Component/Subcomponent
objectType	The object type distinguishes between stable and dynamic documents. Only stable documents are used in XDM, and therefore in 360X.	R	N/A fixed to urn:uuid:7edca82f-054d-47f2-a032-9b2a5b5186c1

3.59.4.1.2.1.3 Document Entry for Clinical Documentation

The table contains all required (R) Document Entry attributes, as well as any "required if known" (R2) or optional (O) attributes, where 360X imposes a specific constraint or connection to the content of the Document Entry.

The corresponding source information from the CDA Header for each metadata attribute is already described in PCC TF-2:4.1.1, XDSDocumentEntry Metadata.

Note: The Document Entry metadata is the same as in Section 3.57.4.1.2.1.3, Table 3.57.4-3. It is provided here for completeness and to make the reading of the specification easier.

Table 3.59.4-3: 360X Document Entry Attributes for Clinical Documentation

Attribute	Purpose within 360X	Requirement (Source of requirement)	Corresponding HL7 Field/Component/Subcomponent
author	If supplied, MUST match the author of the CDA.	R2 (XDR and XDM for Direct Messaging)	/ClinicalDocument/author
classCode	Identifies the specific document code, as specified in the CDA document.	R (360X) (R2 XDR and XDM for Direct Messaging)	The same as /ClinicalDocument/code/@code
confidentialityCode	Identifies the confidentiality defined for the order. Implementations SHOULD NOT use codes that reveal the specific trigger causes of confidentiality (e.g., ETH, HIV, PSY, SDV).	R2 (XDR and XDM for Direct Messaging)	/ClinicalDocument/confidentialityCode/@code Implementations SHOULD constrain to values that do not reflect the cause of confidentiality such as: V Very restricted R Restricted U Usual control
creationTime	Defines the creation time of the CDA document (as opposed to the order or the submission set).	R2 (XDR and XDM for Direct Messaging)	/ClinicalDocument/effectiveTime Date/Time of the CCDA. In the metadata, the timestamp shall be in UTC.
entryUUID	The identifier used for referencing the Document Entry object within the metadata.	R (XDR and XDM for Direct Messaging)	N/A

 Copyright © 2021: IHE International, Inc.

Attribute	Purpose within 360X	Requirement (Source of requirement)	Corresponding HL7 Field/Component/Subcomponent
formatCode	The specific format of the message.	R (360X)	The format code defined for the specific CDA document template: urn:ihe:pcc:xphr:2007 or urn:hl7-org:sdwg:ccda-structuredBody:2.1
hash	SHA-1 hash of the content.	R (XDM)	N/A
healthcareFacilityTypeCode	See also practice setting type. This code represents the type of organizational setting of the clinical encounter documented in the CCDA. Note that in context of 360X, this is the facility type of the Referral Request Initiator.	R2 (XDR and XDM for Direct Messaging)	Must be consistent with /ClinicalDocument/author
languageCode	Specifies the language of the document (order / referral request).	R2 (XDR and XDM for Direct Messaging)	/ClinicalDocument/languageCode
mimeType	The MIME type of the document.	R	text/xml
patientId	The patient ID known to the Referral Initiator. This is either the value of the patientId attribute from the Referral Request, or the value of the sourcePatientId attribute. This value must be the same for the Submission Set, and the other Document entries See PCC TF-1: X.1.3.1.	R (360X) (R2 XDR and XDM for Direct Messaging)	This identifier may be present in /ClinicalDocument/recordTarget/ patientRole/id
practiceSettingCode	Identifies the setting that created the document at a high granularity e.g., Cardiology, FamilyPractice. Should not create ambiguity as compared to healthcareFacilityTypeCode.	R2 (XDR and XDM for Direct)	N/A
size	Size in bytes of the message as it exists in the file system when the contents of the ZIP package are extracted.	R (XDM)	N/A
sourcePatientId	The sourcePatientID is the ID as known by the Referral Recipient. Adding this attribute is useful for enabling future unrelated communications about this patient between the Initiator and Recipient. See PCC TF-1: X.1.3.1.	R2 (360X)	The patient ID may be present in /ClinicalDocument/recordTarget/ patientRole/id

 Copyright © 2021: IHE International, Inc.

Attribute	Purpose within 360X	Requirement (Source of requirement)	Corresponding HL7 Field/Component/Subcomponent
sourcePatientInfo	Demographics information for the patient for whom the referral is made. Adding this attribute is useful for enabling future unrelated communications about this patient between the Initiator and Recipient.	R2 (360X)	The information corresponding to the fields PID-5 (Patient Name), PID-7 (Patient DOB), PID-8 (Patient Sex), and PID-11 (Patient Address) can be found in /ClinicalDocument/recordTarget/ patientRole
typeCode	Further refines classCode – in this case defines the specific HL7 V2 message event type, for this message it is O19.	R (360X)	/ClinicalDocument/code/
uniqueId	Globally unique identifier assigned to the document by its creator.	R	/ClinicalDocument/id
URI	The file name in the ZIP file structure containing the order message.	R (XDM)	N/A
referenceIdList	Contains the referral ID See PCC TF-1: X.1.3.1.	R (360X)	
objectType	The object type distinguishes between stable and dynamic documents. Only stable documents are used in XDM, and therefore in 360X.	R	N/A fixed to urn:uuid:7edca82f-054d-47f2-a032-9b2a5b5186c1

3.59.4.1.2.2 Message Content – Referral Status Update

The status update of the Interim Consultation Note message is an HL7 Version 2 OSU^O51^OMG_O51 message. The complete message definition can be found in the 360X HL7 V2 Message Payload Definition (chapters 3 to 5).

A table containing only the required segments and fields can be found as part of the 360X project implementation Guide at https://oncprojectracking.healthit.gov/wiki/display/TechLab360X/360X+Implementation+Guide#id-360XImplementationGuide-6.3.3MessageOSU^O51^OSU_O51.

The following fields are further defined for the purpose of the Referral Outcome:

Table 3.59.4-4: 360X Status Update Fields

Data element	Message Field	Format and use
Order Control Code	ORC-1	The value of SC SHALL be used for the Interim Consultation Note
Referral ID	ORC-2	<referral ID>^^<assigning authority OID>^ISO
Order status	ORC-5	The value of A SHALL be used for the Referral Outcome

 Copyright © 2021: IHE International, Inc.

Data element	Message Field	Format and use
Ordering provider	ORC-12	The referring provider SHALL NOT be echoed back in the status update message. This field must be empty.

3.59.4.1.2.3 Message Content – Clinical Information

The clinical information for the interim consultation note is conveyed the same way as for the referral outcome. See PCC TF-2: 3.57.4.1.2.3 for the implementation requirements.

3.59.4.1.3 Expected Actions

The message provides some results of the referral. Upon receiving the message, the Referral Initiator's system is expected to extract the payload, and provide the appropriate information about these results to the appropriate users. Particular attention should be paid to cases which indicate that a serious condition was found with the patient for whom the referral was made.

While the XD* metadata, and the CDA header provide the capability to indicate relationships among several documents, it is recommended that each clinical document sent in an Interim Consultation Note needs to be a complete document that can stand on its own.

If multiple Interim Consultation Notes are sent by the Referral Recipient, it is expected that the Referral Initiator's system is able to present all of them to the appropriate users, indicating their date and time of origin.

3.59.5 Security Considerations

The security requirements for the XDM Profile, and the "ZIP over Email" and "Zip over Email Response" Options apply to this transaction.

3.59.5.1 Security Audit Considerations

NA

 Copyright © 2021: IHE International, Inc.

Add Section 3.60

3.60 Appointment Notification [PCC-60]

3.60.1 Scope

This transaction is used to inform the Referral Initiator about a scheduled appointment with the Referral Recipient as part of the fulfillment of the Referral Request. The referral is still considered in progress, until the Referral Outcome transaction [PCC-57] is successfully sent.

3.60.2 Actor Roles

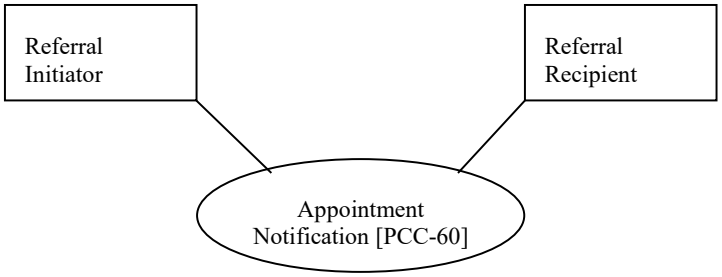

Figure 3.60.2-1: Use Case Diagram

Table 3.60.2-1: Actor Roles

Actor:	Referral Initiator
Role:	The provider who ordered the referral
Actor:	Referral Recipient
Role:	The provider who is acting on the referral

3.60.3 Referenced Standards

HL7 Messaging standard, version 2.5.1 Chapters 2, 10

 Copyright © 2021: IHE International, Inc.

3.60.4 Messages

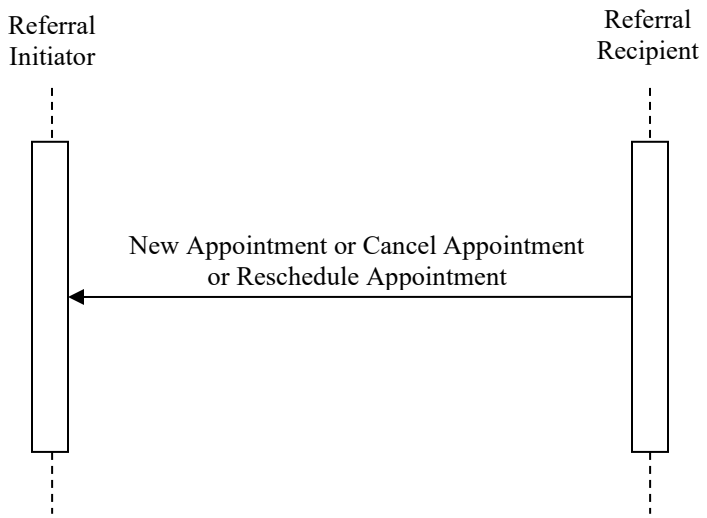

1445 **Figure 3.60.4-1: Interaction Diagram**

3.60.4.1 New Appointment Package

The New Appointment Package contains the scheduling information for an upcoming appointment with the Referral Recipient. It is specifically constrained to describe a single appointment and its link to the referral.

1450 ##### 3.60.4.1.1 Trigger Events

When an appointment is scheduled for a patient in order to fulfill a referral request, the Referral Recipient sends an appointment notification to the Referral Initiator. If the Referral Recipient supports a profile option, which requires the use of Appointment notifications, this message SHALL be sent for all appointments related to a referral.

1455 ##### 3.60.4.1.2 Message Semantics

This message is an XDM package constructed following the rules described in the XDM Profile, transaction [ITI-32], ITI TF-2: 3.32. The current transaction, [PCC-60], adds the following constraints:

- Only a single submission set shall be present in the XDM package (ITI TF-2: 3.32.4.1.2)
- 1460 Only “simple part” documents shall be allowed in the XDM package (ITI TF-2: 3.32.4.1.2.2).

 Copyright © 2021: IHE International, Inc.

The New Appointment XDM package contains an HL7 V2 SIU^S12^SIU_S12 message.

3.60.4.1.2.1 Message Content - Metadata

3.60.4.1.2.1.1 Submission Set

1465 The table contains all required (R) Submission Set attributes, as well as any "required if known" (R2) or optional (O) attributes, where 360X imposes a specific constraint or connection to the content of a Document Entry.

Note: The Submission Set metadata is identical to the metadata described in Section 3.55.4.2.2.1.1, Table 3.55.4-6. It is provided here for completeness and to make the reading of
1470 the specification easier.

Table 3.60.4-1: 360X Submission Set Attributes

Attribute	Purpose within 360X	Requirement (Source of requirement)	Value and Source
author	The entity which created the submission set, including the Referral Recipient's Direct address	R (XDR and XDM for Direct Messaging)	The Direct address of the Referral Recipient is placed in the authorTelecommunication slot of the author classification.
contentTypeCode	Defines the submission set as part of a referral.	R (360X)	LOINC Code 57133-1 is used to indicate that this Submission Set is part of a referral
entryUUID	The identifier used for referencing the Submission Set object within the metadata	R (IHE)	Assigned by the Referral Recipient when the Submission Set was created
intendedRecipient	The entity for which the Submission set is intended	R (XDR and XDM for Direct Messaging)	The Direct address of the Referral Initiator.
patientId	The patient ID known to the Referral Initiator. This is either the value of the patientId attribute from the Referral Request, or the value of the sourcePatientId attribute. This value must be the same for the Submission Set, and the Document Entries within it.	R (360X)	See PCC TF-1: X.1.3.1 for description on how patient identity is conveyed between the Referral Initiator and the Referral Recipient
sourceId	Globally unique identifier representing the entity which created the submission set. Usually an organizational identifier.	R (IHE)	An OID.
submissionTime	Represents the point in time at the creating entity when the SubmissionSet was created.	R (IHE)	Timestamp in UTC

 Copyright © 2021: IHE International, Inc.

Attribute	Purpose within 360X	Requirement (Source of requirement)	Value and Source
uniqueId	Globally unique identifier assigned to the submission set by its creator.	R	An OID.
referenceIdList	The referenceIdList contains the referral ID, as described in PCC TF-1: X.1.131	R (360X)	This attribute is currently only defined by IHE for the Document Entry metadata. Since it is a Slot, however, it is not prohibited from being added to the Submission Set metadata.

3.60.4.1.2.1.2 Document Entry for Appointment Notification

The table contains all required (R) Document Entry attributes, as well as any "required if known" (R2) or optional (O) attributes, where 360X imposes a specific constraint or connection to the content of the Document Entry.

Table 3.60.4-2: 360X Document Entry Attributes for Schedule Information

Attribute	Purpose within 360X	Requirement (Source of requirement)	Corresponding HL7 Field/Component/Subcomponent
author	If supplied, MUST indicate the user who created or manages the appointment	R2 (XDR and XDM for Direct Messaging)	May be based on SCH-20
classCode	Identifies the specific document type, in this case an HL7 V2 Order Status Update.	R (360X) (R2 XDR and XDM for Direct Messaging)	Message Type in MSH-9.1 value: SIU name: Schedule information coding system: 2.16.840.1.113883.18.30
confidentialityCode	Identifies the confidentiality defined for the order. Implementations SHOULD NOT use codes that reveal the specific trigger causes of confidentiality (e.g., ETH, HIV, PSY, SDV)	R2 (XDR and XDM for Direct Messaging)	N/A Implementations SHOULD constrain to values that do not reflect the cause of confidentiality such as: V Very restricted R Restricted U Usual control
creationTime	Defines the creation time of the order message (as opposed to the order itself)	R2 (XDR and XDM for Direct Messaging)	Date/Time of Message in MSH-7. In the metadata the timestamp shall be in UTC time.
entryUUID	The identifier used for referencing the Document Entry object within the metadata	R (XDR and XDM for Direct Messaging)	N/A

 Copyright © 2021: IHE International, Inc.

Attribute	Purpose within 360X	Requirement (Source of requirement)	Corresponding HL7 Field/Component/Subcomponent
formatCode	The specific format for the message	R (360X)	Based on MSH-9.1 and MSH-9.2 value: urn:ihe:pcc:360x:hl7:SIU:S12:2017 name: Schedule information message coding system: 1.3.6.1.4.1.19376.1.2.3
Hash	SHA-1 hash of the content	R (XDM)	N/A
healthcareFacilityTypeCode	See also practice setting type. This code represents the type of organizational setting which accepted the referral request.	R2 (XDR and XDM for Direct Messaging)	May be derived from / mapped to the information in ORC-21 through 24
languageCode	Specifies the language of the document (order / referral request).	R2 (XDR and XDM for Direct Messaging)	Principal Language of Message in MSH-19
mimeType	The MIME type of the message, indicating that it is plain text (ASCII or utf-8), formatted according to the HL7 V2 rules.	R	x-application/hl7-v2+er7
patientId	The patient ID known to the Referral Initiator. This is either the value of the patientId attribute from the Referral Request, or the value of the sourcePatientId attribute. This value must be the same for the Submission Set, and the other Document entries See PCC TF-1: X.1.3.1.	R (360X)	PID-3
practiceSettingCode	Identifies the setting that created the order at a high granularity e.g., Cardiology, FamilyPractice. Should not create ambiguity as compared to healthcareFacilityTypeCode.	R2 (XDR and XDM for Direct)	
Size	Size in bytes of the message as it exists in the file system when the contents of the ZIP package are extracted.	R (XDM)	N/A
sourcePatientId	The sourcePatientID is the ID as known by the Referral Recipient. Adding this attribute is useful for enabling future unrelated communications about this patient between the Initiator and Recipient. See PCC TF-1: X.1.3.1.	R2 (360X)	PID-3

 Copyright © 2021: IHE International, Inc.

Attribute	Purpose within 360X	Requirement (Source of requirement)	Corresponding HL7 Field/Component/Subcomponent
sourcePatientInfo	Demographics information for the patient for whom the referral is made. Adding this attribute is useful for enabling future unrelated communications about this patient between the Initiator and Recipient.	R2 (XDM)	The values from PID-5 (Patient Name), PID-7 (Patient DOB), PID-8 (Patient Sex), and PID-11 (Patient Address) should be used.
typeCode	Further refines classCode – in this case defines the specific HL7 V2 message structure, for this message it is SIU_S12	R (360X)	MSH-9.3 value: SIU_S12 name: Schedule information message structure coding system: 2.16.840.1.113883.18.214
uniqueId	Globally unique identifier assigned to the document by its creator.	R	N/A May be based on Message Control ID in MSH-10
URI	The file name in the ZIP file structure containing the order message.	R (XDM)	N/A
referenceIdList	Contains the referral ID See PCC TF-1: X.1.3.1.	R (360X)	Derived from SCH-26 (Placer Order Number).
objectType	The object type distinguishes between stable and dynamic documents. Only stable documents are used in XDM, and therefore in 360X.	R	N/A fixed to urn:uuid:7edca82f-054d-47f2-a032-9b2a5b5186c1

3.60.4.1.2.2 Message Content – Appointment Notification

The appointment notification is an HL7 Version 2 SIU^S12^SIU_S12 message. The complete message definition can be found in the 360X HL7 V2 Message Payload Definition (chapters 3 to 5).

A table containing only the required segments and fields can be found as part of the 360X project implementation Guide at https://oncprojectracking.healthit.gov/wiki/display/TechLab360X/360X+Implementation+Guide#id-360XImplementationGuide-6.3.4MessageSIU^S12^SIU_S12.

The following fields are further defined for the purpose of the Appointment Notification:

Table 3.60.4-3: 360X Schedule Information Fields

Data element	Message Field	Format and use
Appointment ID	SCH-2	A unique identifier for the appointment.

 Copyright © 2021: IHE International, Inc.

Data element	Message Field	Format and use
Reason for Appointment	SCH-6	LOINC code 57133-1 57133-1^^LN^^^^^^^^^^^2.16.840.1.113883.6.1
Referral ID	SCH-26	<referral ID>^^<assigning authority OID>^ISO
Appointment date and time	TQ1-7	At least the date is required, the time should be specified down to the minute.
Action Code	RGS-2	A for new appointment (SIU^S12).
Appointment provider	AIP-3	This field SHOULD be populated.

3.60.4.1.3 Expected Actions

The message is used to notify the Referral Initiator about a scheduled appointment as part of satisfying an already accepted referral request. If a Referral Recipient choses to implement the 360X Scheduling Option, then all appointments are expected to trigger an appointment notification.

If a Referral Initiator chooses to implement the 360X Scheduling Option, then the Appointment Notifications SHALL be processed, recorded, and presented to the appropriate users, otherwise all Appointment Notifications may be ignored.

If multiple appointments are scheduled by a Referral Recipient who is implementing the Scheduling Option, then multiple Appointment Notifications (one for each appointment) SHALL be sent.

3.60.4.2 Reschedule Appointment Package

The Reschedule Appointment Package contains the scheduling information for an upcoming appointment with the Referral Recipient, which has its original date and time changed from the original new appointment notification.

3.60.4.2.1 Trigger Events

When an existing appointment related to the referral is re-scheduled for a different date or time, or if the provider with whom the original appointment was made has changed, the Referral Recipient shall send a Reschedule Appointment message if, and only if, the rescheduled appointment has the same appointment identifier in SCH-2 as the original one.

3.60.4.2.2 Message Semantics

This message is an XDM package constructed following the rules described in the XDM Profile, transaction [ITI-32], ITI TF-2: 3.32. The current transaction, [PCC-60], adds the following constraints:

- Only a single submission set shall be present in the XDM package (ITI TF-2: 3.32.4.1.2)

 Copyright © 2021: IHE International, Inc.

- Only "simple part" documents shall be allowed in the XDM package (ITI TF-2: 3.32.4.1.2.2).

The Reschedule Appointment XDM package contains an HL7 V2 SIU^S13^SIU_S12 message.

3.60.4.2.2.1 Message Content - Metadata

See 3.60.4.1.2.1 with the following changes:

- substitute SIU^S13^SIU_S12 for any mention of SIU^S12^SIU_S12.
- format code value is urn:ihe:pcc:360x:hl7:SIU:S13:2017 and the format code name is "Schedule reschedule information".

3.60.4.2.2.2 Message Content – Appointment Reschedule

See 3.60.4.1.2.2 with the following changes:

- substitute SIU^S13^SIU_S12 for any mention of SIU^S12^SIU_S12.
- data element "Action Code", field RGS-2, shall have the value of U

3.60.4.2.3 Expected Actions

The message is used to notify the Referral Initiator about the re-scheduling of an appointment as part of satisfying an already accepted referral request. If a Referral Recipient chooses to implement the 360X Scheduling Option, then appointment rescheduling, where the appointment identifier remains the same, SHOULD trigger an appointment reschedule notification.

If a Referral Initiator chooses to implement the 360X Scheduling Option, then the Appointment Reschedule Notifications SHALL be processed, recorded, and presented to the appropriate users, otherwise all Appointment Reschedule Notifications may be ignored.

3.60.4.3 Cancel Appointment Package

The Cancel Appointment Package contains the cancellation of the patient's upcoming appointment with the Referral Recipient. If this is part of rescheduling the existing appointment, where the new appointment has a new appointment ID, the Cancel appointment SHALL be followed by a New Appointment Notification.

3.60.4.3.1 Trigger Events

The Cancel Appointment message is sent in two cases:

1. When a patient cancels the appointment in advance.
2. When the patient or the Referral Recipient reschedules the appointment, and the new appointment has a different appointment ID (SCH-2). In this case, the Cancel Appointment SHALL be followed by a New Appointment message.

 Copyright © 2021: IHE International, Inc.

3.60.4.3.2 Message Semantics

This message is an XDM package constructed following the rules described in the XDM Profile, transaction [ITI-32], ITI TF-2: 3.32. The current transaction, [PCC-60], adds the following constraints:

- Only a single submission set shall be present in the XDM package (ITI TF-2: 3.32.4.1.2)
- Only "simple part" documents shall be allowed in the XDM package (ITI TF-2: 3.32.4.1.2.2).

The Cancel Appointment XDM package contains an HL7 V2 SIU^S15^SIU_S12 message.

3.60.4.3.2.1 Message Content - Metadata

See 3.60.4.1.2.1 with the following changes:

- substitute SIU^S15^SIU_S12 for any mention of SIU^S12^SIU_S12.
- format code value is urn:ihe:pcc:360x:hl7:SIU:S15:2017 and format code name is "Schedule cancel information"

3.60.4.3.2.2 Message Content – Cancel Appointment

See 3.60.4.1.2.2 with the following changes:

- substitute SIU^S15^SIU_S12 for any mention of SIU^S12^SIU_S12.
- data element "Action Code", field RGS-2, shall have the value of D

3.60.4.3.3 Expected Actions

The message is used to notify the Referral Initiator about the cancellation of an appointment, previously scheduled as part of satisfying an already accepted referral request. If a Referral Recipient choses to implement the 360X Scheduling Option, then

- appointment cancelation by the patient SHALL trigger an Appointment Cancel
- appointment rescheduling of an existing appointment where the appointment ID (SCH-2) is different from the original, SHALL trigger an Appointment Cancel, followed by a New Appointment Notification.

If a Referral Initiator chooses to implement the 360X Scheduling Option, then the Appointment Cancel Notifications SHALL be processed, recorded, and presented to the appropriate users, otherwise all Appointment Cancel Notifications may be ignored.

3.60.5 Security Considerations

The security requirements for the XDM Profile, and the "ZIP over Email" and "Zip over Email Response" Options apply to this transaction.

 Copyright © 2021: IHE International, Inc.

3.60.5.1 Security Audit Considerations

NA

1580

 Copyright © 2021: IHE International, Inc.

Add Section 3.61

3.61 No-show Notification [PCC-61]

3.61.1 Scope

This transaction is used to inform the Referral Initiator that the patient did not show up for an appointment with the Referral Recipient as part of the fulfillment of the Referral Request.

3.61.2 Actor Roles

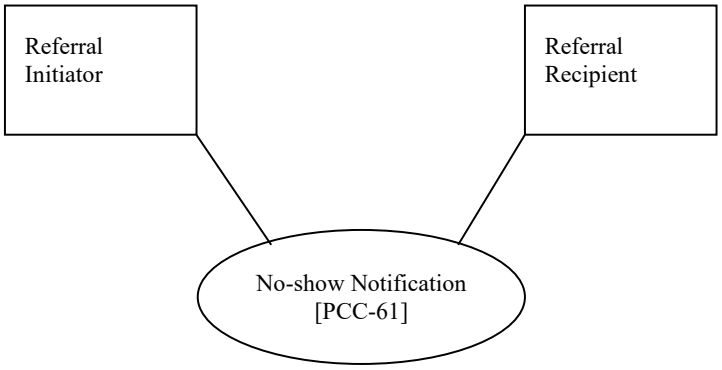

Figure 3.61.2-1: Use Case Diagram

Table 3.61.2-1: Actor Roles

Actor:	Referral Initiator
Role:	The provider who ordered the referral
Actor:	Referral Recipient
Role:	The provider who is acting on the referral

3.61.3 Referenced Standards

HL7 Messaging standard, version 2.5.1 Chapters 2, 10

 Copyright © 2021: IHE International, Inc.

3.61.4 Messages

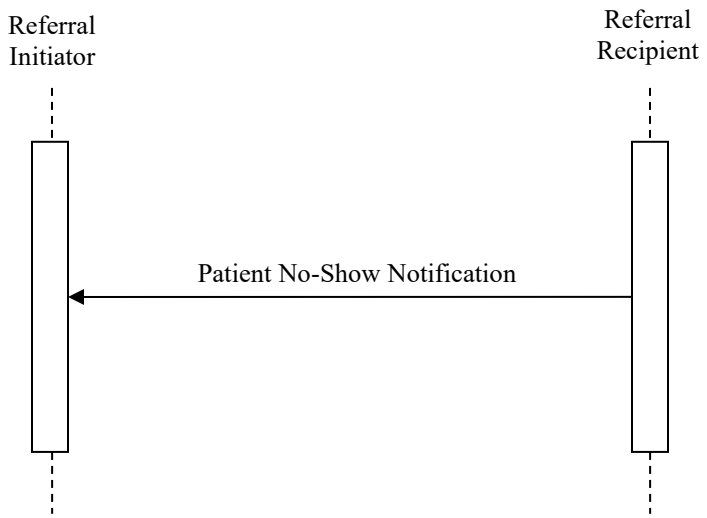

Figure 3.61.4-1: Interaction Diagram

3.61.4.1 No-show Notification Package

The No-show Notification Package contains the scheduling information for the appointment for which the patient did not show up.

3.61.4.1.1 Trigger Events

When a patient misses an appointment which was scheduled in order to fulfill a referral request, the Referral Recipient sends a no-show notification to the Referral Initiator. If the Referral Recipient supports a profile option which requires the use of Appointment notifications, this message SHALL be sent for all no-shows.

3.61.4.1.2 Message Semantics

This message is an XDM package constructed following the rules described in the XDM Profile, transaction [ITI-32], ITI TF-2: 3.32. The current transaction, [PCC-61], adds the following constraints:

- Only a single submission set shall be present in the XDM package (ITI TF-2: 3.32.4.1.2)
- Only “simple part” documents shall be allowed in the XDM package (ITI TF-2: 3.32.4.1.2.2).

The No-Show Notification XDM package contains an HL7 V2 SIU^S26^SIU_S12 message.

 Copyright © 2021: IHE International, Inc.

3.61.4.1.2.1 Message Content - Metadata

3.61.4.1.2.1.1 Submission Set

1615 The table contains all required (R) Submission Set attributes, as well as any "required if known" (R2) or optional (O) attributes, where 360X imposes a specific constraint or connection to the content of a Document Entry.

Note: The Submission Set metadata is identical to the metadata described in Section 3.55.4.2.2.1.1, Table 3.55.4-6. It is provided here for completeness and to make the reading of
1620 the specification easier.

Table 3.61.4-1: 360X Submission Set Attributes

Attribute	Purpose within 360X	Requirement (Source of requirement)	Value and Source
author	The entity which created the submission set, including the Referral Recipient's Direct address	R (XDR and XDM for Direct Messaging)	The Direct address of the Referral Recipient is placed in the authorTelecommunication slot of the author classification.
contentTypeCode	Defines the submission set as part of a referral.	R (360X)	LOINC Code 57133-1 is used to indicate that this Submission Set is part of a referral
entryUUID	The identifier used for referencing the Submission Set object within the metadata	R (IHE)	Assigned by the Referral Recipient when the Submission Set was created
intendedRecipient	The entity for which the Submission set is intended	R (XDR and XDM for Direct Messaging)	The Direct address of the Referral Initiator.
patientId	The patient ID known to the Referral Initiator. This is either the value of the patientId attribute from the Referral Request, or the value of the sourcePatientId attribute. This value must be the same for the Submission Set, and the Document Entries within it.	R (360X)	See PCC TF-1: X.1.3.1 for description on how patient identity is conveyed between the Referral Initiator and the Referral Recipient
sourceId	Globally unique identifier representing the entity which created the submission set. Usually an organizational identifier.	R (IHE)	An OID.
submissionTime	Represents the point in time at the creating entity when the SubmissionSet was created.	R (IHE)	Timestamp in UTC

 Copyright © 2021: IHE International, Inc.

Attribute	Purpose within 360X	Requirement (Source of requirement)	Value and Source
uniqueId	Globally unique identifier assigned to the submission set by its creator.	R	An OID.
referenceIdList	The referenceIdList contains the referral ID, as described in PCC TF-1: X.1.3.1	R (360X)	This attribute is currently only defined by IHE for the Document Entry metadata. Since it is a Slot, however, it is not prohibited from being added to the Submission Set metadata.

3.61.4.1.2.1.2 Document Entry for No-show Notification

The table contains all required (R) Document Entry attributes, as well as any "required if known" (R2) or optional (O) attributes, where 360X imposes a specific constraint or connection to the content of the Document Entry.

Note: The Document Entry metadata is the same as in Section 3.60.4.1.2.1.2, Table 3.60.4-2, with the exception of formatCode, which is specific to this message.

Table 3.61.4-2: 360X Document Entry Attributes for Schedule Information

Attribute	Purpose within 360X	Requirement (Source of requirement)	Corresponding HL7 Field/Component/Subcomponent
Author	If supplied, MUST indicate the user who created or manages the appointment	R2 (XDR and XDM for Direct Messaging)	May be based on SCH-20
classCode	Identifies the specific document type, in this case an HL7 V2 Order Status Update.	R (360X) (R2 XDR and XDM for Direct Messaging)	Message Type in MSH-9.1 value: SIU name: Schedule information coding system: 2.16.840.1.113883.18.30
confidentialityCode	Identifies the confidentiality defined for the order. Implementations SHOULD NOT use codes that reveal the specific trigger causes of confidentiality (e.g., ETH, HIV, PSY, SDV)	R2 (XDR and XDM for Direct Messaging)	N/A Implementations SHOULD constrain to values that do not reflect the cause of confidentiality such as: V Very restricted R Restricted U Usual control
creationTime	Defines the creation time of the order message (as opposed to the order itself)	R2 (XDR and XDM for Direct Messaging)	Date/Time of Message in MSH-7. In the metadata the timestamp shall be in UTC time.

 Copyright © 2021: IHE International, Inc.

Attribute	Purpose within 360X	Requirement (Source of requirement)	Corresponding HL7 Field/Component/Subcomponent
entryUUID	The identifier used for referencing the Document Entry object within the metadata	R (XDR and XDM for Direct Messaging)	N/A
formatCode	The specific format for the message	R (360X)	Based on MSH-9.1 and MSH-9.2 value: urn:ihe:pcc:360x:hl7:SIU:S26:2017 name: Schedule no-show message coding system: 1.3.6.1.4.1.19376.1.2.3
Hash	SHA-1 hash of the content	R (XDM)	N/A
healthcareFacilityTypeCode	See also practice setting type. This code represents the type of organizational setting which accepted the referral request.	R2 (XDR and XDM for Direct Messaging)	N/A
languageCode	Specifies the language of the document (order / referral request)	R2 (XDR and XDM for Direct Messaging)	Principal Language of Message in MSH-19
mimeType	The MIME type of the message, indicating that it is plain text (ASCII or utf-8), formatted according to the HL7 V2 rules.	R	x-application/hl7-v2+er7
patientId	The patient ID known to the Referral Initiator. This is either the value of the patientId attribute from the Referral Request, or the value of the sourcePatientId attribute. This value must be the same for the Submission Set, and the other Document entries See PCC TF-1: X.1.3.1	R (360X)	PID-3
practiceSettingCode	Identifies the setting that created the order at a high granularity e.g., Cardiology, FamilyPractice. Should not create ambiguity as compared to healthcareFacilityTypeCode.	R2 (XDR and XDM for Direct)	
Size	Size in bytes of the message as it exists in the file system when the contents of the ZIP package are extracted	R (XDM)	N/A

 Copyright © 2021: IHE International, Inc.

Attribute	Purpose within 360X	Requirement (Source of requirement)	Corresponding HL7 Field/Component/Subcomponent
sourcePatientId	The sourcePatientID is the ID as known by the Referral Recipient. Adding this attribute is useful for enabling future unrelated communications about this patient between the Initiator and Recipient. See PCC TF-1: X.1.3.1	R (360X)	PID-3
sourcePatientInfo	Demographics information for the patient for whom the referral is made. Adding this attribute is useful for enabling future unrelated communications about this patient between the Initiator and Recipient.	R (XDM)	The values from PID-5 (Patient Name), PID-7 (Patient DOB), PID-8 (Patient Sex), and PID-11 (Patient Address) should be used.
typeCode	Further refines classCode – in this case defines the specific HL7 V2 message structure, for this message it is SIU_S12	R (360X)	MSH-9.3 value: SIU_S12 name: Schedule information message structure coding system: 2.16.840.1.113883.18.214
uniqueId	Globally unique identifier assigned to the document by its creator.	R	N/A May be based on Message Control ID in MSH-10
URI	The file name in the ZIP file structure containing the order message	R (XDM)	N/A
referenceIdList	Contains the referral ID See PCC TF-1: X.1.3.1	R (360X)	Derived from SCH-26 (Placer Order Number).
objectType	The object type distinguishes between stable and dynamic documents. Only stable documents are used in XDM, and therefore in 360X	R	N/A fixed to urn:uuid:7edca82f-054d-47f2-a032-9b2a5b5186c1

3.61.4.1.2.2 Message Content – No-show Notification

The no-show notification is an HL7 Version 2 SIU^S26^SIU_S12 message. The complete message definition can be found in the 360X HL7 V2 Message Payload Definition (chapters 3 to 5).

A table containing only the required segments and fields can be found as part of the 360X project implementation Guide at https://oncprojectracking.healthit.gov/wiki/display/TechLab360X/360X+Implementation+Guide#id-360XImplementationGuide-6.3.5MessageSIU^S26^SIU_S12.

The following fields are further defined for the purpose of the No-Show Notification:

 Copyright © 2021: IHE International, Inc.

1640 **Table 3.61.4-3: 360X Schedule Information Fields**

Data element	Message Field	Format and use
Appointment ID	SCH-2	A unique identifier for the appointment. If an appointment notification was sent, the appointment ID SHALL match
Reason for Appointment	SCH-6	LOINC code 57133-1 57133-1^^LN^^^^^^^^^^^2.16.840.1.113883.6.1
Referral ID	SCH-26	<referral ID>^^<assigning authority OID>^ISO
Appointment date and time	TQ1-7	At least the date is required, the time should be specified down to the minute
Action Code	RGS-2	Since the appointment didn't take place, the values is fixed to D
Appointment provider	AIP-3	This field MAY be populated.

3.61.4.1.3 Expected Actions

The message is used to notify the Referral Initiator that the patent did not show up for an appointment related to an already accepted referral request. If a Referral Recipient choses to
1645 implement the 360X Scheduling Option, then all no-shows are expected to trigger a no-show notification.

If a Referral Initiator chooses to implement the 360X Scheduling Option, then the No-Show Notifications SHALL be processed, recorded, and presented to the appropriate users, otherwise all No-show Notifications MAY be ignored.

1650 ### 3.61.5 Security Considerations

The security requirements for the XDM Profile, and the "ZIP over Email" and "Zip over Email Response" Options apply to this transaction.

3.61.5.1 Security Audit Considerations

NA

 Copyright © 2021: IHE International, Inc.

Appendices

None

Volume 2 Namespace Additions

Add the following terms to the IHE General Introduction Appendix G:

None

 Copyright © 2021: IHE International, Inc.

Volume 3 – Content Modules

NA

 Copyright © 2021: IHE International, Inc.

Volume 4 – National Extensions

Add appropriate Country section

 Copyright © 2021: IHE International, Inc.

4 National Extensions

4.I National Extensions for IHE USA

4.I.1 Comment Submission

This national extension document was authored under the sponsorship and supervision of IHE USA, who welcome comments on this document and the IHE USA initiative. Comments should be directed to:

pcc@ihe.net

4.I.2 Closed Loop Referral (360X)

The US national extension for the Closed Loop Referral adds additional requirements in three areas:

- Using Direct for the underlying protocol
- HL7 V2 MSH and PID segment requirements for the HL7 v2 messages in all transactions.
- Use of C-CDA for the Clinical Documentation content in transactions Referral Request [PCC-55], Referral Outcome [PCC-57], and Interim Consultation Note [PCC-59].

4.I.2.1 360X Transport Requirements – Use of Direct

The US National Extension requires the use of Direct as the transport protocol for the XDM package for the messages in each transaction.

In addition to the specification in the Applicability Statement for Secure Health Transport, the Referral Request Package also needs to comply with the following:

- In addition to the XDM package, the Referral Initiator shall include the C-CDA content as an additional S-MIME part in the Direct message as a fallback for Referral Recipients who are not 360X capable. If the Referral Initiator knows that the Referral Recipient supports the 360X Profile, the Referral Initiator is not required to provide that additional S-MIME part.

4.I.2.2 360X HL7 V2.x Requirements - MSH and PID Segments

This national extension aims to keep the definition of common segments in the HL7 version 2.x message content similar to already existing specifications in this realm. A complete HL7 V2.x guide for use with 360X can be found in this Google Document.

Specific requirements for each message used in the 360X transactions are shown in the 360X Implementation Guide as follows:

 Copyright © 2021: IHE International, Inc.

- Referral Order (OMG^O19^OMG_O19), part of transaction [PCC-55]: https://oncprojectracking.healthit.gov/wiki/display/TechLab360X/360X+Implementation+Guide#id-360XImplementationGuide-6.3.2MessageOMG^O19_OMG_O19
- Referral Status Change (OSU^O51^OSU_O51), part of transactions [PCC-55] through [PCC-59]: https://oncprojectracking.healthit.gov/wiki/display/TechLab360X/360X+Implementation+Guide#id-360XImplementationGuide-6.3.3MessageOSU^O51^OSU_O51
- Appointment Notification (SIU^S12^SIU_S12), Appointment Reschedule (SIU^S13^SIU_S12), and Cancel Appointment (SIU^S15^SIU_S12), part of transaction [PCC-60]: https://oncprojectracking.healthit.gov/wiki/display/TechLab360X/360X+Implementation+Guide#id-360XImplementationGuide-6.3.4MessageSIU^S12^SIU_S12
- Appointment No-Show (SIU^S26^SIU_S12), part of transaction [PCC-61]: https://oncprojectracking.healthit.gov/wiki/display/TechLab360X/360X+Implementation+Guide#id-360XImplementationGuide-6.3.5MessageSIU^S26^SIU_S12

4.I.2.3 360X Clinical Content Requirements – Consolidated CDA

This national extension requires the use of the C-CDA Content Option defined in the 360X Profile (PCC TF-1: X.1.2) The requirements for Consolidated CDA (C-CDA) documents are described in the HL7 Implementation Guide for CDA Release 2: Consolidated CDA Templates for Clinical Notes (US Realm) DSTU Release 2.1. C-CDA documents are used for the clinical content in transactions Referral Request (PCC TF-2: 3.55.4.1.2.3), Referral Outcome (PCC TF-2: 3.57.4.1.2.3), and Interim Consultation Note (PCC TF-2: 3.59.4.1.2.3).

 Copyright © 2021: IHE International, Inc.